ARMY, MARINE CORPS, NAVY, AIR FORCE

AMCI

ARMY AND MARINE CORPS INTEGRATION IN JOINT OPERATIONS

FM 3-31.1
MCWP 3-36

NOVEMBER 2001

AIR LAND SEA APPLICATION CENTER

DISTRIBUTION RESTRICTION: Approved for public release; distribution is unrestricted.

MULTISERVICE TACTICS, TECHNIQUES, AND PROCEDURES

FOREWORD

This publication has been prepared under our direction for use by our respective commands and other commands as appropriate.

JOHN N. ABRAMS
General, USA
Commander
Training and Doctrine Command

EDWARD HANLON, JR.
Lieutenant General, USMC
Commanding General
Marine Corps Combat
Development Command

This publication is available on the General Dennis J. Reimer Training and Doctrine Digital Library at www.adtdl.army.mil

PREFACE

1. Scope

This unclassified publication addresses the *hows* of Army-Marine Corps Integration (AMCI) in joint operations. It describes the capabilities and limitations of selected United States Army (USA) and United States Marine Corps (USMC) units and provides methodologies in the form of tactics, techniques, and procedures (TTP) for the integrated employment of those units in a joint warfighting environment.

2. Purpose

This publication provides a single-source reference detailing multiservice TTP for planning and executing joint operations between Army and USMC forces.

3. Application

This publication applies to the operating forces of the Army and Marine Corps. Although the focus of the publication is at the joint force and component levels, it has application for planning and warfighting personnel at all echelons.

4. Implementation Plan

Participating service command offices of primary responsibility (OPR) will review this publication, validate the information, reference, and incorporate it in service manuals, regulations, and curricula as follows:

Army. The Army will incorporate the procedures in this publication in Army doctrinal and training publications as directed by the Commander, USA Training and Doctrine Command (TRADOC). Distribution is in accordance with DA Form 12-99-R.

Marine Corps. The Marine Corps will incorporate the procedures in this publication in USMC doctrinal and training publications as directed by the Commanding General, United States Marine Corps Combat Development Command (MCCDC). Distribution is in accordance with Marine Corps Publication Distribution System (MCPDS).

5. User Information

a. TRADOC, MCCDC, and Air Land Sea Application (ALSA) Center developed this publication with the joint participation of the approving service commands. ALSA will review and update this publication as necessary.

b. This publication reflects current joint and service doctrine, command and control organizations, facilities, personnel, responsibilities, and procedures. Changes in service protocol, appropriately reflected in joint and service publications, will likewise be incorporated in revisions to this document.

c. We encourage recommended changes for improving this publication. Key your comments to specific pages and paragraphs and provide a rationale for each recommendation. Send comments and recommendations to—

Army

Commander
US Army Training and Doctrine Command
ATTN: ATDO-A
Fort Monroe VA 23651-5000
DSN 680-3153 COMM (757) 727-3153

Marine Corps

Commanding General
US Marine Corps Combat Development Command
ATTN: C42 (Director)
3300 Russell Road, Suite 318A
Quantico VA 22134-5021
DSN 278-6234 COMM (703) 784-6234

ALSA

ALSA Center
ATTN: Director
114 Andrews Street
Langley AFB, VA 23665-2785
DSN 575-0902 COMM (757) 225-0902
E-mail: alsa.director@langley.af.mil

*FM 3-31.1 US Army Training and Doctrine Command
Fort Monroe, Virginia

*MCWP 3-36 Marine Corps Combat Development Command
Quantico, Virginia

21 November 2001

AMCI
Army and Marine Corps Integration in Joint Operations

TABLE OF CONTENTS

Page

EXECUTIVE SUMMARY xi

CHAPTER I ORGANIZATION AND FUNDAMENTALS

Background I-1
United States Army (USA) Corps I-2
Heavy Notional Army Brigade I-2
Marine Air-Ground Task Force (MAGTF) I-4
Marine Expeditionary Force (MEF) I-5
Marine Expeditionary Brigade (MEB) I-5
Fundamentals of Army-Marine Corps Integration AMCI) Operations I-8
Augmentation Requirements I-8

CHAPTER II COMMAND AND CONTROL

Background II-1
Terminology II-1
Command Relationships II-1
Organization of Forces II-3
Liaison II-4
Command and Control (C2) Communications II-6
Army Tactical C2 System (ATCCS) II-7
Notional Army Brigade C2 Organizations and Facilities II-8
Notional Army Brigade Communications Architecture II-10
MEB C2 Facilities II-12
MEB Communications II-13
AMCI Communications II-15

*This publication supersedes FM 90-31 and MCRP 3-3.8, 29 May 1996.

CHAPTER III INTELLIGENCE

Background III-1
Terminology III-1
Intelligence Responsibilities III-1
Notional Army Brigade Intelligence III-2
Notional Army Brigade Intelligence Organizations III-3
MAGTF Intelligence Organizations III-6
AMCI Intelligence Operations III-8

CHAPTER IV MANEUVER

Background IV-1
Notional Army Brigade Ground Maneuver Organizations IV-1
Maneuver of the Notional Army Brigade IV-4
MEB Maneuver Organizations IV-6
Maneuver of the MEB IV-8
Integrated Maneuver and Complementary Capabilities IV-10

CHAPTER V FIRE SUPPORT

Background V-1
Fire Support Coordinating Measures (FSCMs) V-1
Notional Army Brigade Fire Support Operations V-1
Army Aviation V-6
MEB Fire Support Operations V-6
Integrated Fire Support Operations V-8

CHAPTER VI ENGINEER OPERATIONS

Background VI-1
Terminology VI-1
Notional Army Brigade Operations VI-1
MEB Engineer Operations VI-2
Integrated Engineer Operations VI-8

CHAPTER VII AVIATION

Background VII-1
Army Aviation Overview VII-1
Capabilities and Limitations VII-4
Command and Control VII-5
Planning Considerations VII-7
Marine Aviation VII-12
Aviation Combat Element VII-12
Marine Aviation Functions VII-13
Notional Army Brigade Under MEF Control VII-22
MEB Under Army Corps Control VII-24
Communications Integration VII-29

CHAPTER VIII AIR AND MISSILE DEFENSE

Background VIII-1
Integrated Army and Marine Corps Air and Missile Defense Operations VIII-1
Army Air and Missile Defense Operations VIII-7
MEB Operations VIII-12
Command and Control VIII-12
MAGTF Air and Missile Defense Organizations and Equipment VIII-13

CHAPTER IX ADMINISTRATION AND LOGISTICS

Background IX-1
Authority for Logistics Operations IX-1
Joint Logistics Functions IX-2
Notional Army Brigade Logistics Organizations IX-2
Notional Army Brigade Logistics Operations IX-12
MEF Logistics Organizations IX-14
MEB Logistics Operations IX-19
Integrated Logistics IX-21
Logistics Status Reporting IX-30

APPENDIX A UNITED STATES ARMY CORPS A-1

APPENDIX B MARINE AIR-GROUND TASK FORCES (MAGTFs) B-1

APPENDIX C REPORTING FORMATS C-1

REFERENCES References-1

GLOSSARY Glossary-1

INDEX Index-1

FIGURES

I-1 Notional Army Brigade I-3
I-2 Notional Marine Corps Expeditonary Brigade I-6
III-1 Notional Army Brigade Direct Support Military Intelligence (MI) Company III-4
III-2 Intelligence and Reconnaissance Units/Assets III-6
III-3 MEF G-2 Section III-7
III-4 Intelligence Battalion III-7
IV-1 Notional Army Brigade Mechanized Infantry Battalion IV-2
IV-2 Notional Army Brigade Tank Battalion IV-3
IV-3 Marine Infantry Regiment IV-7
IV-4 Light Armored Reconnaissance Company IV-8
V-1 Notional Army Brigade Fire Support Coordination Organizations V-2

V-2 Notional Army Brigade Field Artillery Organization **V-3**
V-3 Multiple Launch Rocket System (MLRS) Battery **V-5**
V-4 Notional MEB Artillery Battalion **V-7**
V-5 Marine Air Command and Control System (MACCS)/ Force Fires Coordination Center (FFCC) /Fire Support Coordination Center (FSCC) Relationships **V-8**
VI-1 Notional Army Brigade Engineer Battalion **VI-2**
VI-2 Notional MEB Engineers **VI-3**
VI-3 MEB Ground Combat Element (GCE) Combat Engineer Company **VI-4**
VI-4 MEB Air Combat Element (ACE) Marine Wing Support Squadron **VI-5**
VI-5 MEB Brigade Service Support Group (BSSG) Engineer Company **VI-7**
VII-1 Notional MEF ACE Organization **VII-13**
VII-2 Close Air Support (CAS) Request Procedures **VII-16**
VII-3 Helicopter Support Team (TM) **VII-20**
VII-4 US Army/USMC Air Operations Connectivity **VII-25**
VII-5 CAS/Air Interdiction (AI) Support Request Channels **VII-26**
VII-6 Immediate CAS Request Channels **VII-27**
VII-7 Airlift Support Request Channels **VII-28**
VIII-1 Dissemination Measures Between Corps and MEB **VIII-6**
VIII-2 Dissemination Measures Between the MEF and Notional Army Brigade **VIII-6**
VIII-3 Notional Army Brigade Air Defense Artillery (ADA) Organization **VIII-9**
VIII-4 Corps ADA Brigade Organization **VIII-10**
IX-1 Forward Support Battalion **IX-2**
IX-2 Sample Corps Support Group (-) **IX-7**
IX-3 Notional Brigade Service Support Group **IX-16**
IX-4 Aviation Combat Element Logistics Organization **IX-18**
IX-5 Logistics C2 Notional Army Brigade Under MEF **IX-22**
IX-6 Notional Combat Support Battalion in Support of a MEB **IX-22**
IX-7 MEB Logistics C2 Under Corps Control **IX-23**
A-1 Notional US Army Corps **A-1**
A-2 Heavy Armored Cavalry Regiment **A-2**

TABLES

I-1 Notional Army Brigade Capabilities and Limitations Summary **I-4**
I-2 Capabilities and Limitations of the MEB **I-8**
I-3 Notional Army Brigade Augmentation Requirements **I-9**
I-4 MEB Augmentation Requirements **I-10**
II-1 Liaison Requirements from Notional Army Brigade to MEF **II-5**
II-2 Liaison Requirements from MEF to Notional Army Brigade **II-5**

II-3 Liaison Requirements from MEB to Corps **II-6**
II-4 Liaison Requirements from Corps to MEB **II-6**
II-5 Notional Army Brigade Command Group Functions and Characteristics **II-9**
II-6 Notional Army Brigade Tactical CP Functions and Characteristics **II-9**
II-7 Notional Army Brigade Main CP Functions and Characteristics **II-10**
II-8 Notional Army Brigade Rear CP Functions and Characteristics **II-10**
II-9 Notional Army Brigade Signal Platoon Capabilities/Limitations Summary **II-11**
II-10 Notional Army Brigade Signal Section Capabilities/Limitations Summary **II-11**
II-11 MEB DS Communications Company (Reinforced) Capabilities and Limitations Summary **II-14**
II-12 Typical Communications Systems Available from Marine Corps DS Communications Company (Reinforced) and Notional Army Brigade Signal Section **II-15**
III-1 Notional Army Brigade Operations Platoon Capabilities **III-5**
III-2 Intelligence Battalion Capabilities **III-8**
III-3 Notional Army Brigade Collection/Electronic Warfare (EW) Capabilities **III-9**
III-4 MEB Collection/EW Capabilities **III-10**
IV-1 M2 Bradley Fighting Vehicle Characteristics **IV-2**
IV-2 M1064A3 (120mm) Mortar Characteristics **IV-3**
IV-3 M1A1 Abrams Tank Characteristics **IV-4**
IV-4 Notional Army Brigade Maneuver Space Requirements **IV-5**
IV-5 Unopposed Movement Rates **IV-6**
IV-6 MEB Mobility Assets **IV-9**
IV-7 AMCI Operations Complementary Capabilities (Amphib Operations/Passage of Lines) **IV-10**
IV-8 AMCI Operations Complementary Capabilities (Movement to Contact) **IV-11**
IV-9 AMCI Operations Complementary Capabilities (Attack) **IV-11**
IV-10 AMCI Operations Complementary Capabilities (Breaching/River Crossing Operations) **IV-12**
IV-11 AMCI Operations Complementary Capabilities (Defend) **IV-13**
IV-12 AMCI Operations Complementary Capabilities (Retrograde) **IV-14**
IV-13 Opposed Rates of Movement in Km/h **IV-15**
IV-14 Major Weapons and Aircraft Summary **IV-17**
V-1 Army Fire Support Coordination Organizations and Coordinators **V-1**

V-2 Firepower Comparison of MLRS and 155mm Howitzer **V-4**
V-3 MEB Target Acquisition Assets **V-8**
V-4 Inherent Responsibilities of Artillery Standard Tactical Missions **V-10**
V-5 Characteristics of MEB and Notional Army Brigade Artillery **V-11**
V-6 MLRS Ammunition Planning Figures **V-14**
V-7 Notional Army Brigade Artillery External Communications Net Structure When Operating with MEF **V-16**
V-8 MEB Artillery External Communications Net Structure When Operating with Corps **V-17**
VI-1 Notional Army Brigade Engineer Battalion Equipment **VI-2**
VI-2 Notional Combat Engineer Company (Reinforced) Equipment in Support of a MEB GCE **VI-4**
VI-3 Marine Wing Support Squadron (MWSS) (Fixed-Wing) Engineer Equipment **VI-6**
VI-4 Notional Engineer Company (Reinforced) Equipment in Support of a MEB BSSG **VI-7**
VI-5A Mobility Tasks **VI-8**
VI-5B Countermobility Tasks **VI-9**
VI-5C Survivability Tasks **VI-9**
VI-5D General Engineering Tasks **VI-10**
VII-1 *Possible* Army Aviation Task Force **VII-2**
VII-2 Army Aviation Missions **VII-3**
VII-3 Army Aviation Capabilities and Limitations **VII-4**
VII-4 Aviation Deep Operations GO/NO-GO Planning Matrix **VII-9**
VII-5 Asset Capabilities for Antiair Warfare Tasks **VII-14**
VII-6 TACP/FACP Personnel **VII-19**
VII-7 MEB Fixed-Wing Aircraft Capabilities **VII-21**
VII-8 MEB Rotary-Wing Aircraft Capabilities **VII-22**
VII-9 Army Aviation Aircraft Capabilities and Limitations **VII-23**
VII-10 Army Aviation Communications Equipment Summary **VII-31**
VII-11 USAF/USMC/USN Fixed-Wing Aircraft Communications Summary **VII-32**
VII-12 TACP/FAC Communications Equipment **VII-33**
VIII-1 Inherent Responsibilities of Air Defense Standard Tactical Missions **VIII-3**
VIII-2 Types and Capabilities of Army ADA Weapons **VIII-7**
IX-1 FSB Supply Company Capabilities/Major Equipment **IX-3**
IX-2 MSB Augmentation of Notional Army Brigade **IX-5**
IX-3 Corps Direct Support (DS) Supply Capabilities **IX-9**
IX-4 Supply Company (DS) Major Equipment **IX-9**

IX-5 Ammunition Company (DS) Major Equipment **IX-10**
IX-6 Maintenance Company (DS) Capabilities **IX-10**
IX-7 Maintenance Company (DS) Major Equipment..... **IX-11**
IX-8 Combat Service Support Organizations **IX-15**
IX-9 Illustrative Class III Consumption Rates **IX-26**

THIS PAGE INTENTIONALLY LEFT BLANK

EXECUTIVE SUMMARY

Army and Marine Corps Integration (AMCI) in Joint Operations

This publication-

- **Provides multiservice tactics, techniques, and procedures focusing on the integrated employment of United States Army (USA) and United States Marine Corps (USMC) forces.**
- **Provides various operational tools for commanders and joint planners in task-organizing Army and USMC forces.**

Our national military strategy recognizes today's uncertain world requires flexible and interoperable forces that can respond quickly to the multitude of potential crises that may threaten United States vital national interests. To respond to these crises, the nation's evolving force structure must be both capable and responsive to implement and enforce the strategy that will protect our national interests. The exact composition of a given force depends on the nature of the crisis and the prevailing strategic politico-military environment. Such "adaptive force packaging" seeks to maximize the capabilities of operational execution. This publication focuses on one type of force packaging available to the joint warfighting community: the integrated employment of Army and USMC forces.

Chapter I

Organization and Fundamentals

Chapter I provides an overview of selected Army and USMC forces, and describes the organization, capabilities, and limitations of a notional Army brigade and a Marine Expeditionary Brigade (MEB). It also discusses the fundamentals of integrated operations to maximize the capabilities of one force to counterbalance the vulnerabilities of the other.

Chapter II

Command and Control

Chapter II provides an overview, principals, and responsibilities of communications. It describes command and control (C2) organizations, facilities, and communications architecture of both a notional Army brigade and MEB.

Chapter III

Intelligence

Chapter III addresses intelligence support of AMCI operations. It highlights selected terms and defines the responsibilities of the various intelligence organizations that support the joint force.

Chapter IV

Maneuver

Chapter IV defines maneuver at the operational and tactical levels of war and describes a joint Army-USMC perspective on maneuver. It focuses on maneuver from both a notional Army brigade and MEB and includes a discussion of maneuver from an integrated vantage point. Specific topics include: AMCI operational capabilities, tactical planning considerations, recommended employment options, and a recapitulation of major weapons systems and aircraft.

Chapter V

Fire Support

Chapter V defines fire support operations. It discusses Army and USMC service perspectives on fire support, selected coordinating measures, and fire support tactics, techniques and procedures to support integrated combat operations.

Chapter VI

Engineer Operations

Engineers provide commanders with significant capabilities to assist them in multiplying the battle effectiveness of both maneuver and fire. Chapter VI describes engineer support to combat operations. It establishes common terminology and addresses Army and USMC engineer C2, organizations, and equipment. It also offers an integrated approach to planning and executing those operations by cross-walking engineering capabilities regarding the four common primary functions of mobility, countermobility, survivability, and general engineering.

Chapter VII

Aviation

Chapter VII familiarizes commanders and staffs on the mission, capabilities, limitations, C2, and planning factors for employment of respective service aviation organizations. It also describes AMCI operational and augmentation requirements.

Chapter VIII

Air and Missile Defense

Chapter VIII addresses joint force air and missile defense operations. It provides the basis for a common lexicon and details operations from Army and USMC perspectives.

Chapter IX

Administration and Logistics

Chapter IX defines authority, responsibilities, and control of logistics supporting the joint force. This chapter also includes a discussion of integrated logistics using the six logistics functions as the framework (supply, maintenance, health services, transportation, other services, and civil engineering).

PROGRAM PARTICIPANTS

The following commands and agencies participated in the development of this publication:

Commandant
United States Army command and General Staff College
ATZL-FD-CD
1 Reynolds Ave
Fort Leavenworth, KS 66027-1352

Commandant
United States Army Infantry School
ATTN: ATSH-ATD
Fort Benning, GA 31905-5000

Commandant
United States Army Engineer School
ATTN: ATSE-DOT
Fort Leonard Wood, Mo 65473-8929

Commandant
United States Army Signal Center and School
ATTN: ATZH-CDC
Fort Gordon, GA 30905-5090

Commandant
U.S. Army Field Artillery School
ATTN: ATSF-DDD
Fort Sill, OK 73503-5600

Commandant
United States Army Armor School
ATTN: ATZK-MW-DTD
Fort Knox, KY 40121-5200

Commandant
United States Army Air Defense Artillery School
ATTN: ATSA-DT
Fort Bliss, TX 79916-3802

United States Army Combined Arms Support Command and Fort Lee
ATN: ATCL-CDD
3901 A Avenue
Fort Lee, VA 23801

Marine Corps Combat Developments Command
Joint Doctrine Branch
3300 Russell Road, 3rd Floor, Suite 318A
Quantico, VA 22134-5021

HQDA, ODCSOPS (DAMO-SSP)
400 Army Pentagon
Washington D.C. 20310-0400

HQ INSCOM
ATTN: IAOP-SP
Fort Belvoir, VA 22060

Chapter I

ORGANIZATION AND FUNDAMENTALS

"The nature of modern warfare demands that we fight as a team.... Effectively integrated joint forces expose no weak points or seams to enemy action, while they rapidly and efficiently find and attack enemy weak points...."
(Joint Publication (JP) 1, Joint Warfare of the Armed Forces of the United States)

1. Background

Given the expanse of options available to joint planners in task-organizing United States Army (USA) and United States Marine Corps (USMC) forces, this publication provides two "base cases" for discussion. These two cases focus on command and control (C2) of a notional army brigade by a Marine Expeditionary Force (MEF) and C2 of a notional Marine Expeditionary Brigade (MEB) by an Army corps.

a. Notional Army Brigade. The notional army brigade serves as the centerpiece for the discussions that follow. Throughout this text, notional army brigade refers to a tailored, early-deploying armor-heavy/mechanized force. The Army has four different types of divisions: light, heavy, airborne, and air assault. The most likely scenario for Army and USMC contingencies is the use of a brigade from a heavy division. See Appendix A, United States Army Corps, for an overview of other Army forces that may employ with USMC forces. The rationale for using the notional army brigade is threefold:

(1) A notional army brigade will likely be the initial mechanized force deployed in a contingency situation requiring a mechanized capability.

(2) Notional army brigades are ideally suited to deploy and linkup with prepositioned Army equipment.

(3) Notional army brigades feature unique capabilities that complement USMC capabilities.

b. Notational MEB. Throughout this text, MEB refers to Marine Air-Ground Task Force (MAGTF) outlined in Marine Corps Bulletin 3501. This MEB is centered around the equipment and supplies loaded on the ships of a Maritime Prepositioning Ship Squadron (MPSRON). This MEB is also commonly referred to as a Maritime Prepositioning Force (MPF) Brigade. For the sake of consistency, any reference to amphibious operations will be based on the pretense that the Marines and equipment of this notional MEB are embarked on amphibious shipping. See Appendix B, Marine Air-Ground Task Forces (MAGTFs) for an overview of different type USMC forces that may employ with Army forces.

2. United States Army (USA) Corps

The corps, commanded by a lieutenant general, is designed to conduct operations at the tactical or operational level of war and normally fights as part of a larger joint or multinational force within the context of campaigns or major operations. See Appendix A and Field Manual (FM) 3-100.1 (100-15), Corps Operations, for further information.

a. Composition. Because corps differ in size and composition, there is no standard organization. Depending on the preponderance of armored, mechanized, or light infantry combat units, a corps can be characterized as heavy, light, or mixed. Corps are tailored for the specific requirements of the mission. Generally, a corps consists of:

(1) Two to five divisions

(2) A corps aviation brigade

(3) Corps artillery

(4) A multifunctional corps support command (COSCOM)

(5) A number of combat, combat support (CS), and combat service support (CSS) units that can range in size from companies to brigades.

3. Heavy Notional Army Brigade

The heavy notional army brigade is organized to fight successive battles on any part of the battlefield in conventional, nuclear, or chemical environments. This kind of unit features the mobility, firepower, and survivability needed to destroy enemy forces by fire and maneuver and disrupt enemy operations by fire. An Army brigade is commanded by a colonel.

a. Organization. There is no standard organization for an Army brigade. A notional army brigade is used in this publication to show what forces may compose a brigade during operations in which it may be integrated with the Marine Corps. Specific composition depends on the following:

(1) Strategic situation

(2) Nature of the contingency mission

(3) Forces available

(4) Mission, enemy, terrain and weather, troops and support available, and time available (METT-T/METT-TC) analysis of the particular situation that required the deployment and employment of the brigade.

(**Note:** The Army uses METT-TC, adding civil considerations as a sixth area of analysis. Civil considerations relate to the attitudes and activities of the civilian leaders, populations, and organizations within an area of operations and the impact they have on the conduct of military operations.)

Figure I-1 represents a notional army brigade. The model is not absolute for the units or types and quantities of weapons portrayed; its function is to serve as a common point of departure for subsequent discussions throughout the publication.

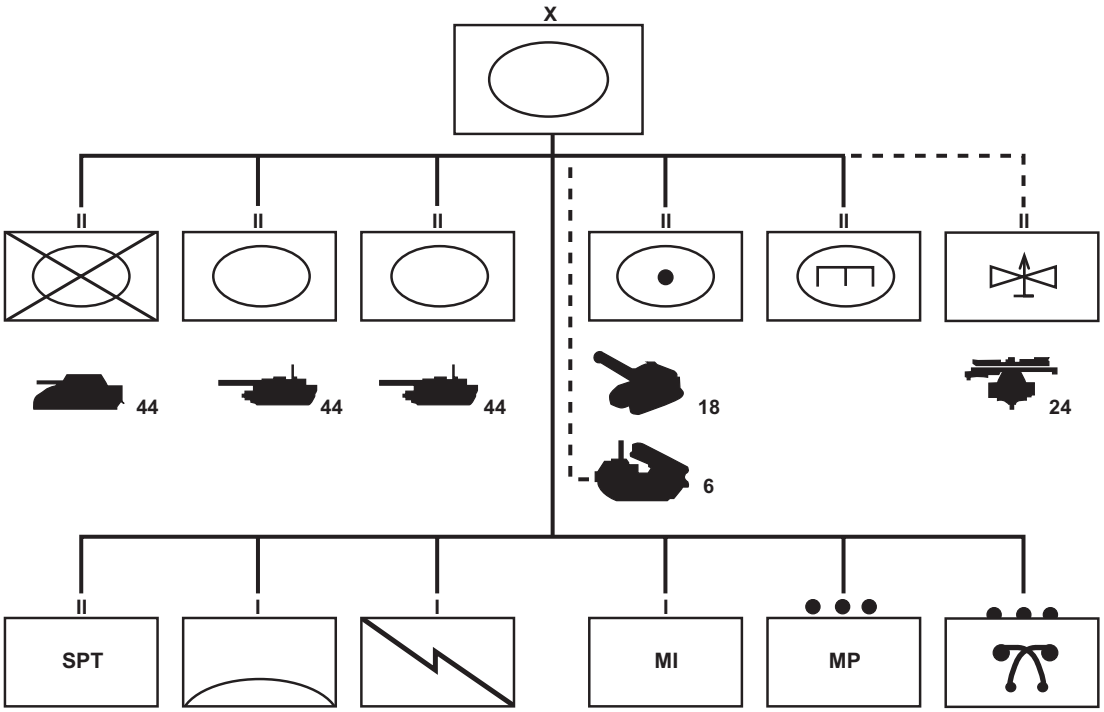

Figure I-1. Notional Army Brigade

Note: This is a notional organization. These assets will be provided according to METT-T/METT-TC and availability. It will be difficult for the Army to provide the multiple launch rocket system (MLRS) battery and the aviation battalion.

b. Capabilities and Limitations. The notional army brigade performs missions assigned by higher headquarters and conforms to that commander's intent and concept of operation. Although capable of acting independently, the brigade normally conducts operations as part of a larger force. Table I-1 lists capabilities and limitations of the notional army brigade.

Table I-1. Notional Army Brigade Capabilities and Limitations Summary	
Capabilities	**Limitations**
• C2 up to five ground and air maneuver battalions and supporting CS and CSS units • Conduct range of sustained offensive and defensive combat operations • Conduct covering force operations • Conduct security operations • Penetrate enemy forward defenses and rapidly maneuver to operational depths • Combine effects of inherent maneuver speed and firepower to exploit opportunities for decisive action • Pursue and destroy enemy forces • Conduct defensive operations of delay • Rapidly conduct linkup operations • Perform as multinational reserve • Perform role as breakout/counterattack force in forcible entry operations • Assist breakout of encircled forces	• Mobility restricted by jungle and dense forests, steep and rugged terrain, and significant water obstacles • Brigade consumes significant quantities of Class III, V, and IX supplies • Strategic mobility limited by available air and sea lift • Bridging capability limited and comes from the reserves • Heavy dependence on radio and digital communications • Significant logistics support required for long administrative ground moves • Capability for dismounted operations limited • Logistics lines of communications (LOCs) dependent and vulnerable to enemy activity • No forcible entry assault capability • Aviation assets may not be available • Deliberate decontamination capability limited • No airmobile operations capability without lift helicopter support (helicopter mix provided) and additional training. • Limited organic intelligence, surveillance, and reconnaissance (ISR) capability

4. Marine Air-Ground Task Force (MAGTF)

The specific composition of MAGTFs depends upon the requirements of a particular mission, but the basic organization is standard. Each MAGTF consists of a command element (CE), a ground combat elements (GCE), an aviation combat element (ACE), and a combat service support element (CSSE).

a. CE. The CE consists of the MAGTF commander, an executive staff, headquarters sections, communications, and other service support sections. The CE serves as the focal point for MAGTF operational execution in coordinating and directing the efforts of assigned aviation, ground, and CSS forces.

b. GCE. The GCE is task organized around combat and CS units and can range in capability and size from a single reinforced rifle company to one or more reinforced Marine divisions (MARDIVs).

c. ACE. The ACE plans and executes air operations for the MAGTF. Marine aviation functions include air reconnaissance, antiair warfare, assault support, offensive air support, electronic warfare (EW), and control of aircraft and missiles. The ACE varies in size from a reinforced helicopter squadron to one or more Marine

Air Wings (MAWs). Like the GCE, the ACE is also task organized with appropriate CS and CSS.

d. CSSE. The CSSE is task organized to provide the necessary CSS to accomplish the MAGTF mission. Based on situational requirements, CSSEs vary in size from an expansive Force Service Support Group (FSSG) that supports a MEF to the Marine Expeditionary Unit (MEU) Service Support Group (MSSG) that supports a MEU.

5. Marine Expeditionary Force (MEF)

The MEF, the largest MAGTF, is the Marine Corps' primary warfighting force. The MEF may consist of one or more MARDIVs, one or more MAWs, and possibly more than one FSSG. An MEF (single division/wing/FSSG) features approximately 55,000 Marine Corps and Navy personnel, 300 fixed and rotary-wing aircraft, 300 combat vehicles, and 72 artillery pieces.

6. Marine Expeditionary Brigade (MEB)

The specific composition depends on the same conditions that dictate the task organization of the notional army brigade described earlier. Figure I-2 shows the organization of a notional MEB. As with the notional army brigade, the model is not absolute for the units or types and quantities of weapons portrayed but designed to serve as a common point of departure for ensuing discussions. The MEB is the mid-sized MAGTF and is normally commanded by a brigadier general. The MEB bridges the gap between the MEU at the tip of the spear, and the MEF, our principal warfighter. Like all MAGTFs, the MEB is comprised of the CE, GCE, ACE, and CSSE. The GCE is normally a reinforced infantry regiment while the ACE is centered on a composite Marine Aircraft Group (MAG), comprised of both rotary and fixed-wing assets. The CSSE is commonly referred to as a Brigade Service Support Group (BSSG) and is capable of sustaining the fighting force for approximately 30 days.

a. Mission. The MEB mission is to plan, coordinate, and conduct sustainable combined arms combat and other expeditionary operations across the spectrum of conflict. MEB tasks include:

(1) Independent operations ranging from forcible entry to humanitarian assistance.

(2) Deployment to Commander in Chief's (CINC) area of responsibility (AOR) as part of joint or combined force

(3) Providing a nucleus Joint Task Force Headquarters (JTF HQ)

(4) Enabling follow-on forces

(5) Being prepared to act as the Marine Corps Service Component

(6) Being prepared to serve as the advance echelon of a MEF

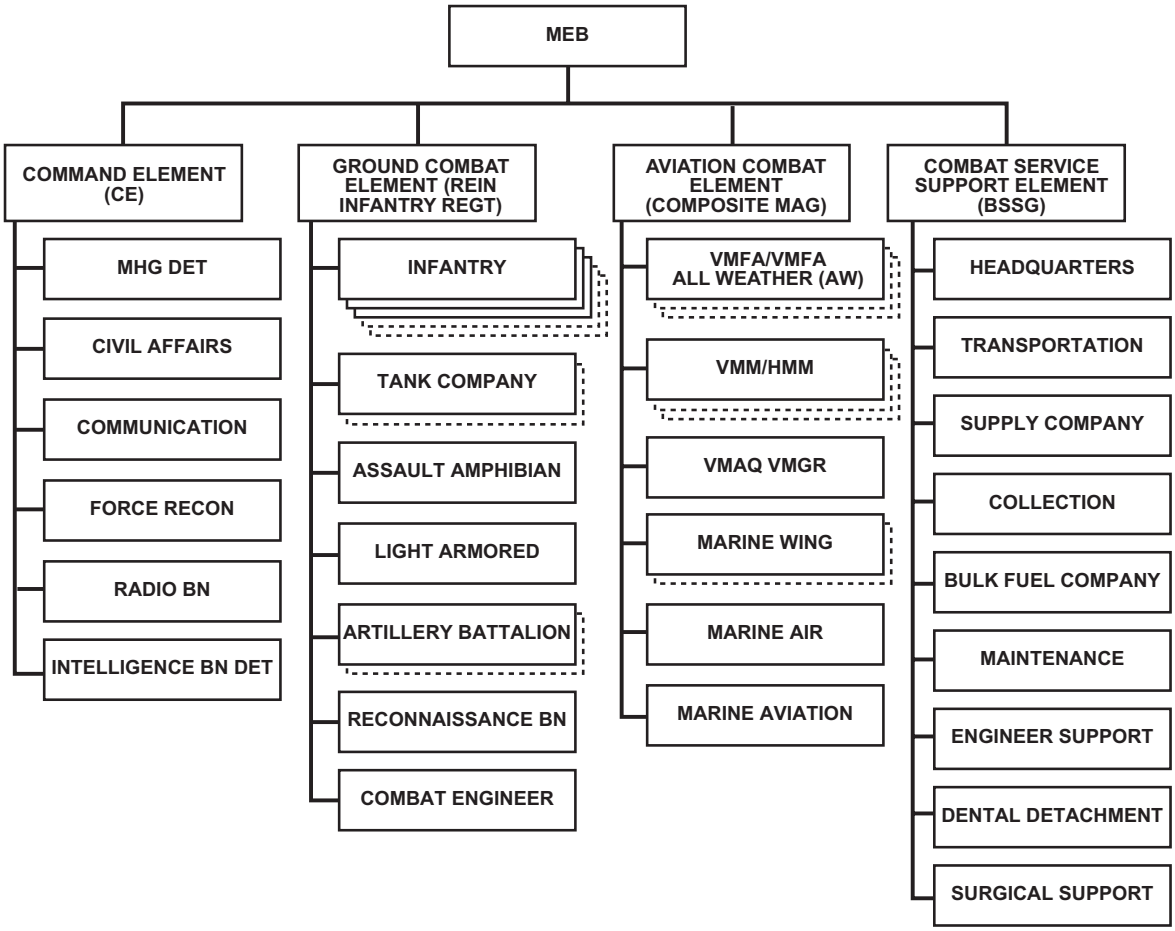

Figure I-2. Notional Marine Corps Expeditionary Brigade

b. MEB Command Element. The MEB command element provides C2 for elements of the MEB. It usually includes the following elements:

(1) Detachment (Det), MEF Headquarters Group

(2) Det, Intelligence Battalion

(3) Det, MEF Liaison Element

(4) Det, Communications Battalion

(5) Det, Radio Battalion

(6) Force Reconnaissance Company

c. GCE. The GCE is normally formed around a reinforced infantry regiment. It usually includes the following elements:

(1) Headquarters Company (reinforced)

(2) 3 to 5 Infantry Battalions

(3) Artillery Battalion

(4) Armor, assault amphibious vehicle (AAV), and light armored vehicle (LAV) capabilities as required

(5) Reconnaissance

(6) Combat Engineer

d. ACE. The ACE is a composite MAG task-organized for the assigned mission. It usually includes the following elements:

(1) Fixed Wing Squadrons — F-18C/D, AV-8B, EA-6B, and KC-130

(2) Rotary Wing Squadrons — CH-46, MV-22, CH-53E, UH-1, and AH-1

(3) Det, Marine Air Control Group (MACG)

(4) Det, Marine Unmanned Aerial Vehicle (UAV) Squadron (VMU)

(5) Det, Marine Air Support Squadron (DASC)

(6) Det, Marine Air Control Squadron (TAOC)

(7) Det, Marine Tactical Air Command Squadron (MTACS)

(8) Det, Marine Air Traffic Control

(9) Det, Marine Wing Support Group

(10) Marine Wing Support Squadron(s)

e. CSSE. The brigade CSSE is task-organized to provide CSS beyond the capability of the supported air and ground elements. It usually includes the following elements:

(1) Engineers

(2) Supply

(3) Transportation

(4) Landing Support-Beach, Port, Airfield

(5) Medical

(6) Maintenance

(7) Services

Table I-2 describes the capabilities and limitations of the MEB.

Table I-2. Capabilities and Limitations of the MEB	
Capabilities	**Limitations**
• C2 several maneuver battalions, a Marine air group, and associated CS and CSS units • Conduct amphibious assaults, raids, demonstrations, withdrawals and other amphibious operations • Seize advanced operating bases • Conduct vertical assaults and envelopments • Conduct sustained combat operations ashore as part of a larger force to achieve campaign or major operations' objectives • Provide close and deep air support and aerial reconnaissance. • Achieve local air superiority to support ground operations. • Conduct EW • Conduct dismounted operations in all geographic environs • Conduct military operations in urban terrain • Coordinate naval support of ground operations • Conduct military operations other than war	• Limited ground capability to counter extensive enemy armor threat • Limited numbers of ground mobility assets constrain tactical mobility to approximately one battalion by ground transport. • Limited capability to conduct mounted ground maneuver operations • Limited protection and decontamination capabilities in nuclear, biological and chemical (NBC) environments • Limited indirect counterfire capability • Limited bridging capabilities. Armored Vehicle Launched Bridges (AVLB) are in active forces while the rest of bridging is in the reserves. • Limited organic ISR capability

7. Fundamentals of Army – Marine Corps Integration (AMCI) Operations

The basic principle for effectively integrating and employing Army and USMC forces as a joint warfighting team is to maximize the capabilities of one force to counterbalance the vulnerabilities of the other. To achieve that end, requirements for additional external forces and assets must be identified and resourced, command relationships must be established, and the force must be task organized for operational planning and execution.

8. Augmentation Requirements

In some circumstances, the notional army brigade and the MEB may fight in the configurations depicted in Figures I-1 and I-2 respectively. In most cases, however, both forces require augmentation to conduct sustained combat operations. The augmentation matrix found in Table I-3 provides a summary of some of the augmentation the notional army brigade may require to operate as part of a MEF. The table also identifies potential sources for the required augmentation assets. Table I-4 provides similar data for the MEB when it operates as part of an Army corps. The tables illustrate rather than prescribe; specific requirements are

situation dependent. Augmentation requirements are addressed in greater detail in succeeding functionally focused chapters.

Table I-3. Notional Army Brigade Augmentation Requirements

Type Operations		From USMC	From Army
C2	Liaison	X	X
	Communications	X	X
	Military police		X
	Civil affairs	X	X
Intelligence	Long range reconnaissance and surveillance	X	X
	Intelligence and electronic warfare	X	X
	Communications	X	X
Maneuver	Combat forces	X	X
Fire Support	MLRS		X
	EW	X	X
	Target acquisition	X	X
	Naval gunfire spotters	X	
Mobility/Survivability	Combat engineers	X	X
	Bridging		X
	Chemical		X
Aviation	Air support (fixed wing)	X	
	Air support (rotary wing)	X	X
	Maneuver (rotary wing)	X	X
Air Defense	SHORAD/HIMAD	X	X
	C2	X	X
Logistics	Class III operations		X
	Class IV operations	X	
	Class V operations		X
	Medical support	(USN)	X
	Transportation		X
	Personnel		X
	Terminal operations	X	X
	Maintenance		X
	Class IX operations (limited)		X
Mortuary Affairs			X
Psychological Operations			X

Legend:
MLRS – multiple launch rocket system
SHORAD – short range air defense
HIMAD – high to medium altitude air defense
USN – United States Navy

Table I-4. MEB Augmentation Requirements			
Type Operations		**From USMC**	**From Army**
C2	Liaison	X	X
	Communications	X	X
	Military police	X	
	Civil affairs	X	X
Intelligence	Long range reconnaissance and surveillance	X	X
	Intelligence and electronic warfare	X	X
	Communications	X	X
Maneuver	Combat forces	X	X
Fire Support	MLRS		X
	EW	X	X
	Target acquisition	X	X
	Naval gunfire spotters	X	
Mobility/Survivability	Combat engineers	X	X
	Bridging (from reserves)	X	X
	Chemical		X
Aviation	Air support (fixed wing)	X	
	Air support (rotary wing)	X	X
	Maneuver (rotary wing)	X	X
Air Defense	SHORAD/HIMAD		X
	C2		X
Logistics	Class III operations		X
	Class V operations		X
	Medical support	(USN)	X
	Transportation		X
	Personnel	X	
	Terminal operations	X	X
	Maintenance		X
Mortuary Affairs			X
Psychological Operations			X

Chapter II

COMMAND AND CONTROL

1. Background

This chapter provides an overview of the C2 system, the principles of C2, and the responsibilities for C2 communications. It also describes the C2 organizations, facilities, and communications architecture of both a notional army brigade and a MEB.

2. Terminology

The joint lexicon features a variety of terms and acronyms that define the concept of C2. Throughout ensuing discussions, *command* refers to the JFC's vested authority as defined in JP 0-2, *Unified Action Armed Forces (UNAAF). C2* indicates the process which commanders use to plan, direct, coordinate, and control forces to accomplish assigned missions. The C2 system, the command, control and communications (C3) system, or the command, control, communications, and computer (C4) system consists of those integrated systems of doctrine, procedures, organizations, personnel, equipment, facilities, and communications that support the commander.

3. Command Relationships

Joint force commanders (JFCs) establish any of the basic command relationships to facilitate C2 of the joint force. These include operational control (OPCON), tactical control (TACON), support, or attachment of forces with the type of command relationship specified as discussed below:

a. OPCON. OPCON may be exercised at any echelon at or below the level of the combatant command. OPCON is inherent in combatant command (COCOM) and is the authority to perform those functions of command over subordinate forces involving organizing and employing commands and forces, assigning tasks, designating objectives, and giving authoritative direction necessary to accomplish the mission. OPCON includes authoritative direction over all aspects of military operations and joint training necessary to accomplish assigned missions.

(1) OPCON is normally exercised through service component commanders. OPCON, in and of itself, does not include authoritative direction for logistics or matters of administration, discipline, internal organization, or unit training. OPCON does include the authority to delineate functional responsibilities and geographic AOR of subordinate commanders.

(2) OPCON is also exercised by functional component commanders over assigned and attached forces and other forces as established by JFCs.

b. TACON. TACON may be exercised by commanders at any echelon at or below the level of COCOM. TACON is the detailed and usually local direction and control of movements or maneuvers necessary to accomplish assigned missions or tasks. TACON provides sufficient authority for controlling and directing the application of force or tactical use of combat support assets. TACON does not provide for administrative and logistic support; the commander of the parent unit continues to exercise those responsibilities unless otherwise specified in the establishing directive. TACON is typically exercised by functional component commanders over military capability or forces made available for tasking that are not assigned or attached to the functional component.

c. Support. A support relationship is established by a senior commander between subordinate commanders when one organization should aid, protect, complement, or sustain another force.

(1) JFCs may establish support relationships within the joint force to enhance unity of effort for given operational tasks, emphasize or clarify priorities, provide a subordinate with an additional capability, or combine the effects of similar assets. The following definitions are from JP 0-2, UNAAF.

(a) Mutual Support. Mutual support is the action that units render each other against an enemy because of their assigned tasks, position relative to each other and to the enemy, and inherent capabilities.

(b) General Support (GS). GS is the action that is given to the supported force as a whole rather than to a particular subdivision thereof.

(c) Direct Support (DS). DS support is a mission requiring a force to support another specific force's request for assistance.

(d) Close Support. Close support is the action of the supporting force against targets or objectives that are near enough to the supported force as to require detailed integration or coordination of the supporting action with fire, movement, or other actions of the supported force.

(2) Establishing supported and supporting relationships between components is a useful option to accomplish needed tasks. This concept applies equally to all components of the joint force. Each subordinate element of the joint force can be supported by other elements.

(3) As stated in JP 0-2, UNAAF, "Unless limited by the establishing directive, the commander of the supported force will have the authority to exercise general direction of the supporting effort." General direction includes the designation of targets or objectives, timing, duration of the supporting action, and other instructions necessary for coordination and efficiency. The supporting commander is responsible for ascertaining the needs of the supported commander and taking the necessary action to fulfill these needs within existing capabilities, consistent with priorities and requirements of other assigned tasks.

(4) The establishing directive indicates the purpose of the support action in terms of the effect desired and the scope of the action to be taken. It should include:

(a) The strength of forces allocated to the supporting mission.

(b) The time, place, and duration of the supporting effort.

(c) The priority of the supporting mission relative to the other missions of the supporting force.

(d) The authority, if any, of the supporting force to depart from its supporting mission in the event of exceptional opportunity or an emergency.

(e) The general or special authority for any operational or other instructions to be issued by the forces being supported or by other authority in the action areas.

d. Attachment. Attachment is the temporary placement of a unit into another organization. Subject to limitations placed by the attachment order, the receiving commander has the same degree of C2 and the same responsibilities for logistics and administration over the unit(s) received as over organic units. The attachment order should specify the supply and maintenance requirements in terms of what the receiving and parent unit will provide.

4. Organization of Forces

Once the JFC has established command relationships, the receiving MEF or corps commander may exercise several options in organizing their forces. In addition to the recommended options described below, the JFC may also elect to establish TACON or support relationships in organizing the joint force.

a. For this discussion, we will illustrate the command relationships for both scenarios: a notional army brigade attached to a MEF, and a MEB attached to an army corps.

(1) Notional Army Brigade to a MEF:

(a) Provide the notional army brigade OPCON/TACON to the MEF for employment by the commander as a separate ground combat element.

(b) Provide the notional army brigade OPCON/TACON to the MEF GCE commander as a separate maneuver force.

(c) Provide the notional army brigade OPCON/TACON to a designated MARDIV to be employed within that division commander's scheme of maneuver.

(2) MEB to Corps:

(a) Provide the MEB OPCON/TACON to an Army corps.

(b) Provide the MEB OPCON/TACON to an Army division.

b. Transfer of Units. Army and Marine Corps forces are structured to operate most efficiently using service doctrine and tactics, techniques, and procedures (TTP). However, there will be situations where circumstances dictate the need to transfer units at levels below the notional army brigade or MEB in order to optimize the capabilities of the joint force and accomplish the mission.

5. Liaison

Liaison teams contribute to successful integrated operations and reduced instances of fratricide. To be effective, liaison teams must be properly trained, planned for, and integrated into all major headquarters elements. In Army and Marine Corps integration (AMCI) operations, robust liaison provides critical linkage between Army and Marine units and contributes to the success of those operations. Liaison provides current expertise and representation for critical planning, coordination, and execution. (See Tables II -1 through II-4.)

a. Duties. Liaison officers (LNOs) advise the sending and receiving commanders. The sending commander is assisted in determining requirements, priorities, and required allocations. The receiving commander is advised on capabilities, tactics, and doctrine of the sending command. The status of the sending and receiving commands is monitored to maintain a basis for advising. LNOs act as a two-way conduit to coordinate and facilitate the flow of support and information between commands.

b. AMCI Liaison Requirements. Commanders must ensure their liaison teams are adequately manned and equipped to execute 24-hour operations and can communicate with their parent elements. The following tables provide recommended liaison exchanges between Army and Marine units during AMCI operations.

Table II-1. Liaison Requirements from Notional Army Brigade to MEF	
Function	**Notional Army Brigade to MEF**
C2	To GCE (command liaison)
	To GCE (G-6 liaison)
Intelligence	To Intelligence Battalion
	To GCE G-2
Maneuver	To GCE G3
	To adjacent units as required
Fire Support	To Force Fires Coordination Center (FFCC) and Senior Fire Support Coordination Center (FSCC)
Engineer	To MEF engineer
Aviation	To ACE
	To GCE G3 air
Air Defense	To ACE
	To GCE G3 air
Logistics	To Force Service Support Group (FSSG)
	To GCE G-4

***Note**: Tables II-1 to II-4 depict the areas, which will require liaison, however, neither service will be able to provide this high number of liaisons. Therefore, liaison officers may be required to interact with several functions of the other service.*

Table II-2. Liaison Requirements from MEF to Notional Army Brigade	
Function	**MEF to Notional Army Brigade**
C2	To notional army brigade signal officer
Intel	To Direct Support Military Intelligence (MI) company as required
Maneuver	Lateral exchange as required
Fire Support	To notional army brigade tactical (TAC) fire support element (FSE)
	To main FSE
Engineer	To notional army brigade Main Command Post (CP)
Aviation	To notional army brigade TAC CP
	Forward Air Controllers (FACs) to maneuver battalions as required
Air Defense	To notional army brigade main CP
Logistics	To rear CP

Table II-3. Liaison Requirements from MEB to Corps	
Function	**MEB to Corps**
C2	To Command Group
	To Corps G-6
Intelligence	To Corps G-2
Maneuver	To G3
	Lateral exchange as required
Fire Support	To Corps FSE
	To maneuver units as required
Engineer	To Corps engineer BDE CP
Aviation	To Corps operations (G3 air)
	To maneuver units as required
Air Defense	To Corps air defense element or brigade CP
Logistics	To Corps support group
	To Corps G-4

Table II-4. Liaison Requirements from Corps to MEB	
Function	**Corps to MEB**
C2	To Command Group
	To MEB G-6
Intelligence	To Intelligence Battalion (BN)
Maneuver	Lateral exchange as required
Fire Support	To MEB FSCC and GCE FSCC
Engineer	To MEB engineer
Aviation	To ACE
	To G3 air
Air Defense	To ACE
Logistics	To BSSG
	To G-4

6. Command and Control (C2) Communications

a. The term *C2 communications* encompasses the means by which the command transmits and receives information and orders.

b. Service Responsibilities.

(1) Provide, operate, and maintain the C2 facilities organic to its own tactical forces, including organic service elements.

(2) Provide, operate, and maintain terminal equipment on defense communications system access circuits, circuits required for communications with elements of other services, and associated circuit facilities.

(3) Provide, operate, and maintain interoperable and compatible C2 systems for distress, disaster, emergency, and safety as directed by proper authority.

c. Lateral Communications. Responsibility for establishing lateral communications between adjacent units may be fixed by the next higher commander or by establishing or adapting standing operating procedures (SOPs). When responsibility is not fixed by orders, commanders establish communications on a geographical basis from left to right and from the rear forward.

7. Army Tactical Command and Control System (ATCCS)

a. ATCCS is a ground mobile, deployable network of common hardware and software for echelons at corps and below. Its purpose is to assist commanders and their staffs to obtain a near real-time access to command critical information requirements (task organization, maneuver, engineer, NBC, signal, Army airspace C2, fire support, air defense, intelligence and electronic warfare (IEW), CSS, resources, and enemy situation) through a force level database.

b. The ATCCS architecture includes five component battlefield functions analysis systems:

(1) The Maneuver Control System (MCS) is the primary automated decision support/information system supporting the tactical commander and staff. The MCS provides the functional applications necessary to access and manipulate the force level information database and satisfy all stated commander's critical information requirements. MCS also allows effective and timely control of current combat operations (deep, close, and rear), and the development and distribution of plans and estimates in support of future operations.

(2) The All Source Analysis System (ASAS) is the intelligence and EW component of the ATCCS. It is a deployable, computer-assisted intelligence and EW analysis, reporting, and technical control system. ASAS receives and rapidly processes large volumes of combat information and sensor reports from all sources to provide timely and accurate targeting information, intelligence products, and threat alerts such as collection management, intelligence processing and reporting, high value/high payoff target processing and nominations, and communications processing and interfacing.

(3) The Forward Area Air Defense Command, Control, Communications, and Intelligence (FAAD C3I) System provides the automated interface between the Forward Area Air Defense System (FAADS) and the C2 nodes within the ATCCS. Functional applications include:

(a) Alerting supported field forces of impending air action.

(b) Providing hostile aircraft cueing to forward area air defense (FAAD) units.

(c) Providing rapid dissemination and acknowledgment of air battle management information.

(d) Providing exchange, processing, and display of air defense command information.

(e) Providing an automated decision support for the planning, coordinating, controlling, and executing of air defense support.

(4) The Combat Service Support Control System (CSSCS) provides critical, timely, integrated, automated logistical information to include all classes of supply, critical systems maintenance statuses, and CSS unit locations as well as integrated logistic planning tools. It is utilized by battalion through echelon above corps (EAC) logistic commanders and staffs.

(5) The Advanced Field Artillery Tactical Data System (AFATDS) provides automated decision support for the fire support function, to include joint and combined fires. The AFATDS provides a fully integrated fire support C3 system, giving the fire support coordinator automated support for planning, coordinating, controlling, and executing close support, counterfire, interdiction, and suppression of enemy air defense (SEAD) systems. AFATDS performs all the fire support operational functions, to include automated allocation and distribution of fires based on target value analysis.

8. Notional Army Brigade C2 Organizations and Facilities

a. The notional army brigade commander commands and controls through an organizational structure that includes the command group, TAC CP, main CP, and rear CP. Tables II-5 through II-8 describe the functions and characteristics of each of these organizations.

b. Command Group. The notional army brigade command group consists of the commander and staff necessary to help command and control the fight. Personnel include the intelligence staff officer (S2), operations staff officer (S3), fire support coordinator (FSCOORD) (Note: USMC uses the acronym fire support coordinator (FSC), and United States Air Force (USAF) air liaison officer (ALO), (USMC uses Air Officer). METT-T/METT-TC may dictate inclusion of the engineer, air defense, and aviation officer, subordinate commanders, or special staff officers. Because the command group fights the battle from the location of the commander, it is a small, highly mobile organization that displaces with the ebb and flow of the tactical situation.

Table II-5. Notional Army Brigade Command Group Functions and Characteristics	
Primary Functions	• Influence the battle
	• Issue planning guidance
	• Conduct ongoing close operations
	• Disseminate the commander's intent
Characteristics	• Comprised of notional army brigade commander and selected personnel
	• Led by commander
	• Small size affords reduced physical and electronic signatures
	• Can relocate to any position on battlefield
	• Communicates on move

c. TAC CP. The TAC CP conducts on-going close operations. The TAC CP provides the commander with a small staff composed of S2, S3, fire support, ALO, aviation, air defense, and other personnel as required. The TAC CP operates well forward in the notional army brigade's area of operation (AO), typically within several kilometers of the forward edge of the battle area (FEBA) or forward line of own troops (FLOT), depending on the situation. It affords the commander the capabilities of exercising C2 over the notional army brigade and planning close operations.

Table II-6. Notional Army Brigade Tactical CP Functions and Characteristics	
Functions	• Controls ongoing close operations
	• Provides the commander with combat critical information
	• Maintains current close operations situation
	• Disseminates the commander's decisions
Characteristics	• Positioned forward in brigade AO
	• Operates in mounted or dismounted modes
	• Organized as a single, cohesive cell
	• Small, highly mobile
	• Comparatively low electronic signature to provide security
	• Controlled by brigade S3

d. Main CP. The main CP or tactical operations center (TOC) provides continuity for notional army brigade operations by synchronizing the entire C2 system. The main CP monitors the close fight, plans future operations, conducts deep operations, and coordinates combat, CS, and CSS requirements to support ongoing and future operations. The main CP includes current operations, plans, intelligence, fire support, communications, and Army airspace command and control (A2C2) sections.

Table II-7. Notional Army Brigade Main CP Functions and Characteristics	
Functions	• Assists the brigade and task force
	• Plans future operations
	• Coordinates operations throughout the depth of the AO
	• Synchronizes CS and CSS assets
	• Executes planned deep attacks
	• Monitors the close fight
	• Conducts rear operations
	• Keeps higher headquarters informed
	• Coordinates with adjacent units
	• Maintains continuous operations for extended periods
	• Assumes C2 of close operations if the TAC CP is destroyed
Characteristics	• Organized by functional cells
	• Operates in mounted or dismounted modes
	• Positioned in brigade rear area
	• Controlled by brigade executive officer (XO)

e. Rear CP. The rear CP sustains the force during current operations, forecasts future CSS requirements, and conducts rear operations. The personnel or manpower staff officer (S1) controls the rear CP and normally collocates with the forward support battalion (FSB) CP in the brigade support area.

Table II-8. Notional Army Brigade Rear CP Functions and Characteristics	
Functions	• Tracks current battle
	• Sustains current deep and close operations
	• Forecasts future CSS requirements
	• Conducts detailed CSS planning
	• Serves as the entry point for units entering the brigade rear area
	• Coordinates with the FSB CP (collocate)
Characteristics	• Positioned in brigade support area
	• Collocates with forward support battalion
	• Operates in mounted or dismounted modes
	• Controlled by the S4

9. Notional Army Brigade Communications Architecture

Two sources provide communications support for the notional army brigade: the communications platoon organic to the brigade headquarters and a signal section provided by the division's signal battalion.

a. Notional Army Brigade Communications Platoon. Table II-9 describes the capabilities and limitations of the communications platoon organic to the notional army brigade's headquarters and headquarters company (HHC).

Table II-9. Notional Army Brigade Signal Platoon Capabilities/Limitations Summary	
Capabilities	**Limitations**
• Provide FM radio net (network) control communications.	• No mobile subscriber equipment (MSE) capability.
• Install, operate, and maintain internal wire communications.	• Limited ability to establish external connectivity.
• Install, operate, and maintain FM radio retransmission to higher HQs.	• Limited communications redundancy and equipment.
• Install, operate, and maintain IHFR communications.	
• Provide tactical facsimile (FAX) capability.	
• Manage COMSEC material.	
• Provide local area network (LAN) management and connectivity into the wide area network (WAN).	

b. Signal Section. A signal section from division assets also provides communications support to the notional army brigade. The section augments the capabilities of the signal platoon and provides the notional army brigade access and connectivity into the MSE network. Table II-10 describes the capabilities and limitations of the signal section.

Table II-10. Notional Army Brigade Signal Section Capabilities/Limitations Summary	
Capabilities	**Limitations**
• Provide secure long haul multichannel tactical satellite (TACSAT) communications connectivity into higher HQs communications network.	• Cannot support full range of MEF MSE requirements.
• Provide secure net radio interface into the MSE network.	• Increased requirement to logistically support additional signal assets
• Provide MSE automated switching service to network subscribers.	
• Install and maintain MSE network for the notional army brigade.	
• Install, operate, and maintain secure single channel (SC) TACSAT communications.	
• Provide remote access unit (RAU) coverage sufficient to support the notional army brigade force.	

10. MEB C2 Facilities

MEB CPs are the facilities (e.g., buildings, structures, ships, tents, and vehicles) used by the commander and staff at each echelon to plan, direct, control, and coordinate operations of assigned forces.

a. The Main Echelon. The primary interests of the main echelon are directing current operations and planning future operations. The main CP is organized into two sections: the current operations staff and future operations staff.

(1) Current operations staff:

(a) Supervises mission execution.

(b) Coordinates combat operations.

(c) Coordinates required CSS.

(d) Handles close and deep operations occurring within 12-72 hours.

(2) Future operations staff:

(a) Plans future, close, and deep operations beyond 72 hours.

(b) Coordinates the C2 organization and support system.

(c) Monitors continuity of MAGTF operations.

(d) Determines friendly and enemy possible courses of action.

(e) Develops execution plans with key decision points and alternate plans.

(f) Ensures synchronization of operating systems in operation plans, branches, and sequels.

b. The Rear Echelon. The rear echelon's primary mission is to provide support to forces conducting combat operations. The rear echelon is located close enough to perform duties without engaging in close combat. The rear CP provides C2 over rear-area security operations, terrain management within the rear area, sustainment operations, control of administrative moves, and other associated functions. The rear echelon is often positioned near major ports, airfields, or telecommunications facilities, or it can remain sea-based.

c. The Tactical Echelon. The primary purpose of the tactical echelon (commonly referred to as the *command group*) is to provide the commander with freedom of movement and the information critical to situational awareness. Typically, the tactical echelon consists of the commander and representatives from the intelligence, operations, and communications staff sections. The tactical echelon must have the mobility and C2 support commensurate with its stated purpose.

11. MEB Communications

a. Organization. The organization charged with the overall responsibility of C4 is the CE. Just as the other elements of the MEB are made up of subordinate units that perform various missions and functions, the CE of a notional MEB consists of a number of command support organizations as required, but traditionally includes:

(1) A headquarters company.

(2) The general staff sections.

(3) A reinforced DS communications company. The DS communications company of the MEB comes from the MEF's communications battalion. The company is task organized to support the functions discussed below. There will also be augmentation from the General Support Company, Service Company and Headquarters Company from the Communications Battalion.

b. Functions. The elements of the MEB must be supported with communications resources whether afloat or ashore. When the MEB CE is sea-based, the Navy amphibious task force provides connectivity to the Naval Telecommunications System (NTS). When ashore, the MEB CE provides entry into the NTS or the Defense Communications System (DCS). Table II-11 shows communications capabilities and limitations associated with the DS communications company assigned to the MEB CE.

Table II-11. MEB DS Communications Company (Reinforced) Capabilities and Limitations Summary	
Capabilities	**Limitations**
• Provides CE with SC (VHF, HF, UHF, SHF) portable and mobile radio sets, to include SC UHF SATCOM (AN/PSC-3/5).	• Limited numbers of SC UHF SATCOM radios.
• Provides CE multichannel (LOS UHF, SHF, and SHF SATCOM) connectivity to subordinates and higher units as part of the communications DTGs network (AN/TRC-170, MRC-142, AN/TSC-85/93).	• Cannot directly connect to MSE network via a SEN due to a signaling format difference. can only be established between ULCS (AN/TTC-42, SB-3865) MSE switches (AN/TTC-47/48/39D) using CCIS trunks at NSC & LEN points of entry.
• Provides CE with internal wire, telephones, and phone switching system (digital and analog), to include STU-III, DSVT, DNVT, AN/TTC-42, SB-3865 & SB-3614.	
• Provides CE with an AUTODIN entry capability, to include stand alone GENSER and DSSCS personnel computers and follow on possibility of a message center (AN/MSC-63).	• Limited communications repair capabilities.
• Provides CE with a tactical FAX (UXC-7A) capable of radio or wire interface.	• Limited communications redundancy in equipment and personnel.
• Provides CE with a secure E-mail to subordinate units using a LAN. LAN includes direct server-to-server and dial up capabilities.	
• Provides CE with DCS and or NTS access (DSCS, FLTSATCOM, or HF DCS entry) with (AN/TSC-85, AN/TSC-96, or AN/TSC-120).	

LEGEND

AUTODIN – automatic digital network
CCIS – Common Channel Interswitch Signaling
DCS – Defense Communications System
DSSCS – Defense Special Security Communications System
DNVT – digital nonsecure voice terminal
DSVT – digital subscriber voice terminal
DTG – date time group
FLTSATCOM – fleet satellite communications
GENSER – general service
HF – high frequency
LAN – local area network
LEN – large extension node
LOS – line of sight
SATCOM – satellite communications
SC – single channel
SEN – small extension node
SHF – super high frequency
STU-III – secure telephone unit III
ULCS – unit level circuit switches

12. AMCI Communications

For effective C2, the commander and staff rely on communications systems that facilitate the passing of information quickly and accurately, in both secure and nonsecure modes. At the brigade/regiment level and below, the Army and the Marine Corps use similar equipment (see Table II-12). Communications challenges include interoperability issues, communications procedures, standard message formats, and communications security (COMSEC).

Table II-12. Typical Communications Systems Available from Marine Corps DS Communications Company (Reinforced) and Notional Army Brigade Signal Section

Capability	DS COMM CO (reinforced)	Notional Army Brigade Signal Section
Combat Net Radio (CNR)/ single channel radio (SCR)	MRC-145 PRC 119 VRC-88 PRC 113	PRC-119 VRC-88, 89, 90, 91, and 92
Switching	TTC-42 SB 3865 SB 3614	MSE-TTC-47, TTC-48
Message center	MSC 63A	
COMSEC	VINSON KY-57 ANDVT KY-99 DLED KG-84C	VINSON, DSVT, KY-99
Tactical FAX	UXC-7A	UXC-7A/B
Telephones	DNVT-TA-1042 and 954, DSVT KY-68 Analog TA-312, 838, and STU-III	DNVT TA-1042, DSVT KY-68 Analog TA-312, 838, TA-1035 and STU-III
Multichannel	TRC-170 V3 MRC-142	
UHF TACSAT	MRC-140 PSC-5 AN/TSC-96	MST-20 PSC-5
SHF Multichannel GMF SAT	TSC-93	AN/TSC-85, AN/TSC-93
HF	MRC-138 PRC-104 AN/TSC-120	AN/GRC-193, PRC-104
Navigational aids MSE	GPS w/GCE	EPLRS NCS (2), SEN (8), RAU (2), R-RAU (2)

a. Interoperability. USMC and Army units use SC frequency modulation radios to communicate at lower unit levels. Both services make use of UHF TACSAT, although the Marine Corps has fewer TACSAT assets than the Army. The Army employs MSE extensively and when operating with Marine Corps units should consider providing MSE to Marine units at critical interface points. One technique is to augment the notional army brigade with a signal communications company (-) from the division signal battalion to provide MSE connectivity between the TOC and brigade support area (BSA) and their MAGTF counterparts.

b. Communications Procedures and Considerations.

(1) Planning. Procedural planning and coordination prevents interoperability conflicts that may hamper C2 effectiveness. Each service has its own peculiar procedures and equipment. Interoperability-specific procedures that assist in effective C2 execution are discussed below:

(a) UHF Voice SATCOM. Upon arrival in the joint operations area (JOA), the notional army brigade or MEB should activate the higher headquarters (HHQ) or joint force (MEF or Army Corps) SC SATCOM circuits. The notional army brigade or MEB should bring SC SATCOM assets for internal and external uses. Intertheater Communications Security Packages (ICPs) are required. The satellite access authorization message will assign 5 or 25 kilohertz (kHz) channels.

(b) HF Voice. Upon arrival in the JOA, the notional army brigade or MEB should activate the HHQ SC HF circuits. The notional army brigade or MEB should bring mobile and portable equipment for internal and external uses (KY-99s and ICP COMSEC. Frequencies and call signs are assigned in accordance with (IAW) the operation plan in concept format or joint communications-electronic operating instructions (JCEOI)/joint signal operating instructions (JSOI).

(c) UHF/VHF Voice. Upon arrival in the JOA, the notional army brigade or MEB should activate the HHQ (MEF or Army Corps) SC UHF/VHF circuits. The notional army brigade or MEB should bring mobile and portable equipment for internal and external uses. Use ICP COMSEC. Frequencies and call signs are assigned IAW the operation plan in concept format (CONPLAN) or JTF JCEOI/ JSOI.

(d) Single Channel Ground and Airborne Radio System (SINCGARS). Upon arrival in the JOA, the notional army brigade or MEB activates the HHQ or JTF SINCGARS circuits. ICP trunk encryption key (TEK), transmission security key (TSK), and hop sets are required. The NET identifications (IDs) are IAW the CONPLAN or JCEOI/JSOI. If ICP TSK and hop sets are not available, the HHQ or JTF must send the notional army brigade or MEB a data transfer device (CYZ-10) for direct transfer of SINCGARS HF data, complete a file transfer with the HF data via a secure means such as a secure telephone unit III (STU-III), and physically transport the file/disk.

(e) Transmission Systems and Telephone Switched Networks. SC radio communications are used throughout the operation between Army and Marine units;

however, major subordinate command (MSC) staffs use telephones to accomplish most coordination. Although interoperable, the Tri-Service Tactical Communications Program (TRI-TAC) ULCS employed by Marine units (SB-3865/TTC-42) and the MSE employed by the Army (TTC-46/47/48/39D) require planners to employ specific techniques and procedures to overcome equipment incompatibilities.

• The first planning consideration is the trunk group data rate used by MSE and ULCS. ULCS will support both modulo 8 (256/512 kilobits per second [kbps]) and 9 (288/576 kbps) trunk group rates. MSE will only support modulo 8 rates. Additionally, the Marine Corps MRC-142 UHF LOS) multichannel radio will transmit only CX-11230 modulo 9 trunk groups.

• The second planning consideration is the interswitch trunk signaling formats utilized by MSE and ULCS. Both use the CCIS format between large and medium switches (TTC-39, 42, 46, 47) but use different forms of digital in-band interswitch trunk signaling (DIBITS) to small switches (TTC-48, SB-3865). ULCS cannot directly connect to a SEN (TTC-48). The TTC-42 can directly connect to a TCC-39D, TTC-46, or TTC-47. The SB-3865 can directly connect only to a TTC-42 or TTC-39D.

• The third planning consideration is the type of transmission path used for the interswitch trunk. In addition to the limitation of the MRC-142 modulo 9-trunk rate, greatly modulated frequency (GMF) satellite (AN/TSC-85/93) will not receive a call from MSE if there is a terrestrial link. At present, the flood search routing utilized by the MSE switches precludes the use of a GMF and terrestrial path simultaneously. This is due to a time delay encountered by MSE flood search calls over GMF paths that causes a call to be routed over terrestrial paths. When fielded, the circuit switch task execution plan (TEP) will reduce the impact of this limitation by allowing MSE switches to direct calls down GMF paths. However, once a terrestrial path is established, the GMF path will not be used by MSE originated calls and will serve only ULCS originated calls.

• The fourth planning consideration is the number of area codes utilized to support the telephone switched network. Presently, both MSE and ULCS equipment pose limitations on the employment of area codes. The MSE switches are capable of crossing the area code boundary between the ULCS (TRI-TAC) and MSE networks to one gateway switch. In order to connect the MSE network to another ULCS switch, the system requires that the second ULCS switch be in a separate area code. The TTC-42 (ULCS) is only capable of being programmed to accommodate its own area code and two others. With MSE, ULCS, and defense switched network (DSN) each being in separate area codes, this is a critical limitation. The TEP will help alleviate this concern by allowing ULCS and MSE switches to reside within the same area code.

(2) Although there are many ways to accommodate the planning considerations listed, the techniques described below can be employed quickly to provide telephone service between Army and Marine units:

(a) During the initial phases of an operation, Marines can establish a MRC-142 link to the Army and provide long local telephone service using remote multiplayer combiner (RMC) and digital subscriber voice terminal (DSVT)/digital nonsecure voice terminal (DNVT) telephones.

(b) The Army can provide a LOS radio link to the Marines and provide long locals from the MSC network.

(c) A TRC-170 link can be established between Army and Marine units using the TD-1235 to provide long local service in both directions. This will be particularly useful when the ULCS switch is the SB-3865 that cannot directly be connected to the MSE SEN, LEN, or net control station (NCS).

(d) If the Marines employ the TTC 42, and the Army employs a NCS, LEN, or TTC-39, an interswitch CCIS trunk group can be established directly between switches.

(e) If Marine units are operating within LOS distance of an Army remote access unit (RAU), the Army can provide mobile subscriber radio terminals (MSRTs) to the Marines.

c. Communications Security. Marine battalions and regiments have COMSEC accounts but generally have only Marine/Navy versions of COMSEC software. Battalions and regiments do not hold joint software packages like the ICP; however, these packages are available at the MAGTF CE. Consequently, the receiving organization (corps or MEF) must provide applicable COMSEC software and subsequent "*fills*" throughout the duration of the AMCI operation. This may necessitate the acquisition of COMSEC materials in addition to the normal holdings of the receiving force.

Chapter III

INTELLIGENCE

1. Background

At the operational level of war, the joint intelligence system: supports the commander; assists the JFC and his staff to visualize the battlespace assessing the adversary capabilities and will; identifies the adversary's center of gravity; and discerns the adversary's probable intent. At both the operational and tactical levels, intelligence provides the basis for planning, synchronizing, and conducting joint force operations.

2. Terminology

JPs 1-02 and 2.0, *Doctrine for Intelligence Support to Joint Operations*, define the key terms and concepts that serve as the foundation for discussion throughout this text. Marine Corps Warfighting Publication (MCWP) 2-12 and FM 2-01.3 (34-130), *Intelligence Preparation of the Battlefield*, further delineate Army and Marine Corps intelligence integration. Key terms and concepts include *intelligence operations*, *intelligence system*, and *intelligence preparation of battlespace (IPB)*.

3. Intelligence Responsibilities

The following highlights intelligence responsibilities for the respective intelligence organizations of the joint force:

a. Senior Intelligence Organization. The senior intelligence organization provides support to the commander and subordinate commands by developing and maintaining data bases that support planning, conduct of IPB, and perform battle damage assessment (BDA) from higher, lower and adjacent sources. The following are primary intelligence responsibilities (this list is not all inclusive).

(1) Establishes plans, policies, and overall requirements for the intelligence activities of the force.

(2) Ensures interoperability and responsiveness of intelligence structure.

(3) Articulates, reviews, and monitors intelligence priorities.

(4) Provides subordinate commands with a single, coordinated intelligence picture by fusing available intelligence into all-source estimates and assessments.

(5) Coordinates the intelligence plans and operations of subordinate commanders.

(6) Conducts IPB, monitors situation development, indications and warning, and supports the commander.

(7) Coordinates the collection, production, and dissemination plans and employment of theater and national collection assets.

(8) Identifies/requests external assistance for intelligence resource shortfalls critical to accomplishing assigned missions.

(9) Establishes and supervises intelligence liaison, coordination, and communications requirements with subordinate, lateral, higher, and national intelligence organizations as appropriate.

(10) Prescribes intelligence security requirements for the entire force.

(11) Counterintelligence (CI). Coordinates and plans CI and force protection.

b. Subordinate Command Intelligence Organizations. The responsibilities of the subordinate command intelligence organizations are to plan, decide, collect, process, produce, and disseminate intelligence to support respective commanders in the employment of their forces to accomplish assigned missions. Within assigned area of interest, subordinate command intelligence organizations:

(1) Assess threat capabilities and provide intelligence estimates.

(2) Develop supporting intelligence plans.

(3) Support target development and weaponeering.

(4) Task organic collection assets with special focus on reconnaissance and surveillance operations.

(5) Perform BDA.

(6) Recommend force protection and counterintelligence measures.

4. Notional Army Brigade Intelligence

Notional army brigade intelligence operations provide the tactical intelligence needed to successfully plan and execute combat operations. The commander uses priority intelligence requirements (PIR) to focus the brigade intelligence effort and leverage higher echelons to support decisionmaking and facilitate targeting. Intelligence operations assist the commander to understand the battlefield, support decisionmaking, and effectively execute combat operations by:

a. Providing indications and warning.

b. Performing IPB.

c. Situation development.

d. Performing target development and supporting targeting.

e. Supporting force protection.

f. Performing BDA.

See FM 2-0, *Intelligence* (FM 34-1, *Intelligence and Electronic Warfare Operations),* for detailed discussion of Army intelligence principles, tasks, and doctrine.

5. Notional Army Brigade Intelligence Organizations

The notional army brigade is supported by a variety of intelligence assets. These assets include Observation Helicopters (OH)-58Ds, long-range surveillance detachments (LRSD), forward observers, EW assets, unmanned aerial vehicles (UAVs), scouts, combat observation and lasing team (COLT), military police (MP), counterbattery radar, observation posts, ground surveillance radar (GSR), convoys, and any other assets capable of providing combat information. Notional army brigade MI assets consist of a S2 section and a DS MI company from the divisional MI battalion. Additional tactically tailored intelligence assets from division, corps, and theater Army MI units can augment the brigade to support split-based intelligence operations, provide additional capabilities such as ground-based EW, or support other mission requirements.

a. Commander. The commander focuses the intelligence effort by identifying, clearly articulating, and prioritizing intelligence and targeting requirements using PIRs. The commander must be responsive to intelligence requirements of subordinate commanders and, when necessary, broker those requirements with higher echelons. The commander must integrate intelligence support into the total combined arms effort to effectively accomplish the mission and exploit the full potential of the intelligence system.

b. Notional Army Brigade S2. The S2 is the commander's senior intelligence officer and principal advisor on the enemy, terrain, and weather. The S2's first and most important responsibility is to provide the intelligence the commander needs for sound and timely decisions. The S2 takes full advantage of intelligence and targeting information available from direct broadcast systems, special purpose intelligence communications, and automated processing systems to meet the commander's requirements. With the staff's support, the S2 integrates new orders and request for intelligence with the command's own requirements, prioritizes the entire set of requirements, and refines them into specific information requirements (SIRs) and his staff further refines the SIRs into specific orders and request (SORs). These SORs are sent to unit commanders for execution. To synchronize intelligence support with the operation and satisfy staff requirements for intelligence, the S2 works closely with other staff elements and supporting MI units. To supply the commander with intelligence and targeting information, the S2 develops and manages the execution of the reconnaissance and surveillance (R&S) plan. The S2 also reviews subordinate battalion R&S plans, integrates subordinate plans into the notional army brigade plan, and forwards the consolidated R&S plan to the next higher echelon. The S2 maintains status of all notional army brigade intelligence assets, processes incoming intelligence reports, and disseminates information to subordinate elements.

c. DS MI Company. The DS MI company maintains a habitual training and operational relationship with the notional army brigade. The company provides organic automated intelligence processing and GSR support. Future capabilities will include UAV control and access through the Common Ground Station to the Joint Surveillance Target Attack Radar System (J-STARS). The company does not possess organic signals intelligence/electronic warfare systems. It relies on higher echelons for this support. The company consists of a headquarters element, an analysis and control team (ACT), and an operations platoon as depicted in Figure III-1.

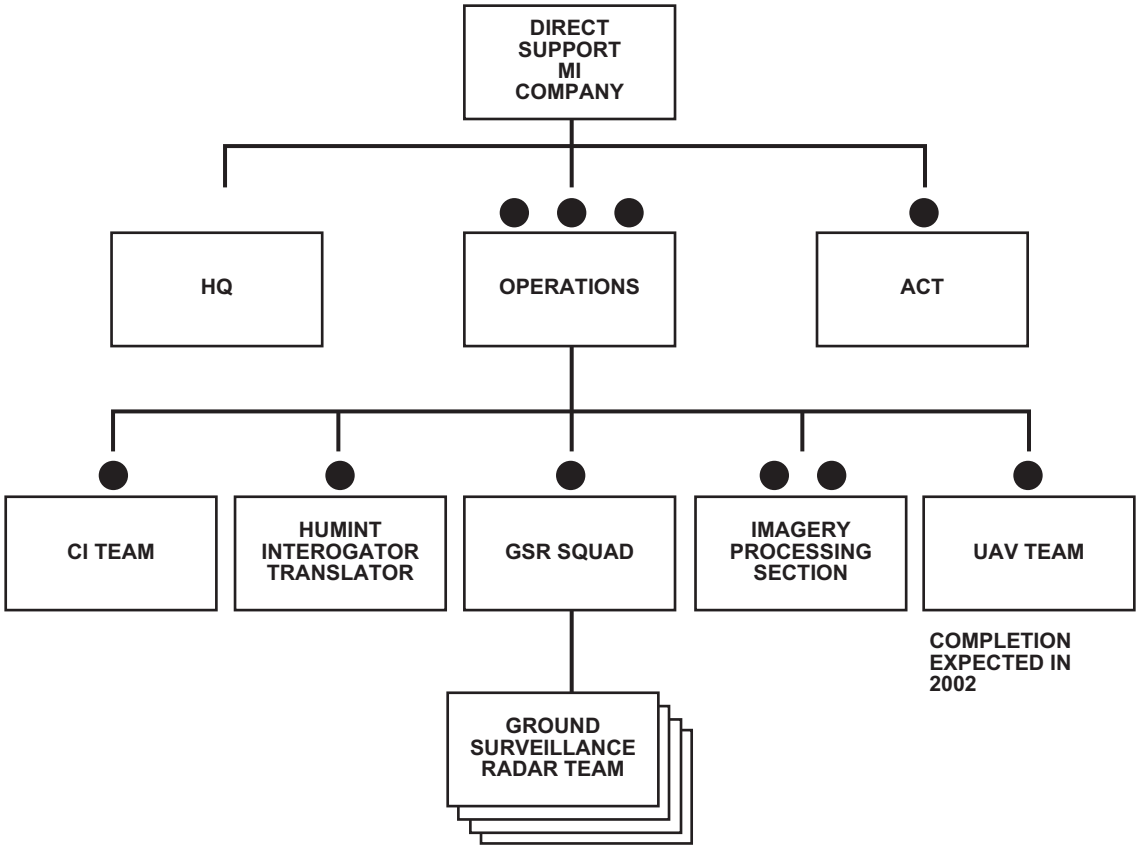

Figure III-1. Notional Army Brigade Direct Support Military Intelligence (MI) Company

The functions of the ACT and operations platoon are:

(1) ACT. The ACT provides the S2 automated intelligence processing, analysis, and dissemination capabilities. Using its ASAS workstation, the ACT provides access to sensitive compartmented information (SCI) databases, reports, graphics, and other intelligence products from higher echelon intelligence organizations such as the division's Analysis and Control Element. When augmented with the TROJAN Special Purpose Integrated Remote Intelligence Terminal (SPIRIT), the ACT, with augmentation, can support limited split-based intelligence operations when supported by the Army Forces (ARFOR), analysis

control element, or the Joint Intelligence Center (JIC) analysis control element located at the ARFOR or the JIC.

(2) Operations Platoon. The operations platoon provides support and conducts asset management of the company's GSR squad. The platoon will possess a UAV section and an imagery processing section when supporting systems are fielded. Table III-1 summarizes the capabilities of the operations platoon.

Table III-1. Notional Army Brigade Operations Platoon Capabilities

Unit	Capability
GSR Squad	Surveillance of enemy routes of attack and order of battle support.
UAV Section	UAV control, video display, and tactical identification. (future capability, not yet fielded).
Imagery Processing Section	Analysis and dissemination of J-STARS radar imagery (future capability, not yet fielded).

d. Intelligence Support Base. The division's G-2 and MI battalion form the intelligence support base for the notional army brigade. The support base is the principal organization in a split-based intelligence operation from which the deployed notional army brigade commander pulls intelligence. It is located in the division garrison or another location outside the AO. The intelligence support base allows the notional army brigade to pull intelligence from its normal intelligence source prior to deployment and during operational stages of a force projection operation. This reduces the possibility of intelligence shortfalls that could arise during the deployment phase from reliance on evolving intelligence organizations or relationships. The notional army brigade can continue to receive support from the division analysis control element in addition to support from intelligence organizations within the theater. Intelligence support from the analysis control element includes production of tailored intelligence products; maintaining accessible intelligence databases needed by the notional army brigade; and other intelligence operations that support the notional army brigade. The intelligence support base may also provide the follow-on intelligence assets and the deployable intelligence support element if the operation involves follow-on Army forces. The intelligence support base complements JTF or theater intelligence structures; it is not intended to circumvent theater or joint force tasking and reporting channels established by the higher echelon's J-2 or G-2.

6. MAGTF Intelligence Organizations

The MAGTF G-2 section serves as the focal point for intelligence, CI, and reconnaissance operations. The G-2 section, supported by task-organized detachments

from the Intelligence Battalion, Radio Battalion, UAV squadron, and Force Reconnaissance Company, provides all-source intelligence support to the MAGTF commander and the major subordinate elements. In addition, the GCE, ACE, and CSSE all have organic intelligence sections and assets to satisfy their unique intelligence requirements as reflected in Figure III-2.

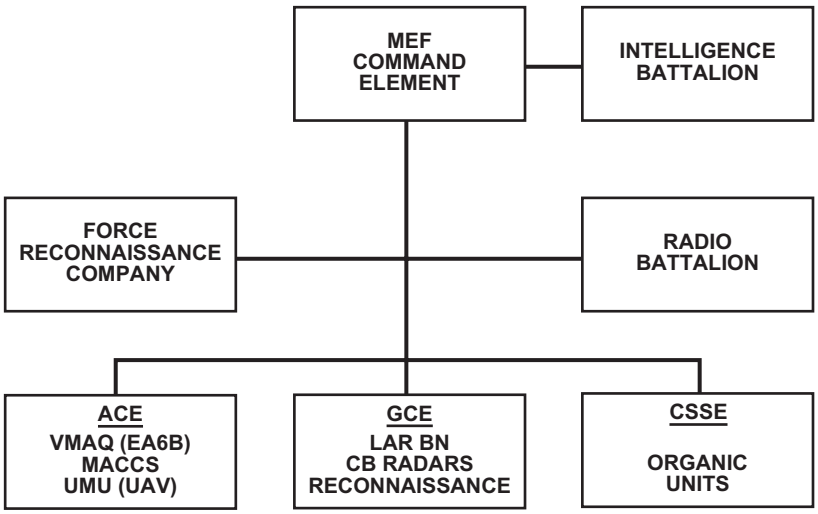

Figure III-2. Intelligence and Reconnaissance Units/Assets

a. MAGTF G-2 Section. The MAGTF G-2 section plans, coordinates, and integrates intelligence operations. It provides centralized planning, direction, collection, production, and dissemination capabilities for the CE and subordinate elements. In addition, it provides connectivity to national, joint, and supporting force intelligence and reconnaissance assets. Figure III-3 depicts the organization of the MEF G-2.

b. Intelligence Battalion. The Intelligence Battalion, depicted in Figure III-4, is organic to a MEF. The Intelligence Battalion of the parent MEF provides a task-organized detachment to a MEB. The intelligence assets from the intelligence battalion detachment consist of some or all of the elements depicted in Table III-2.

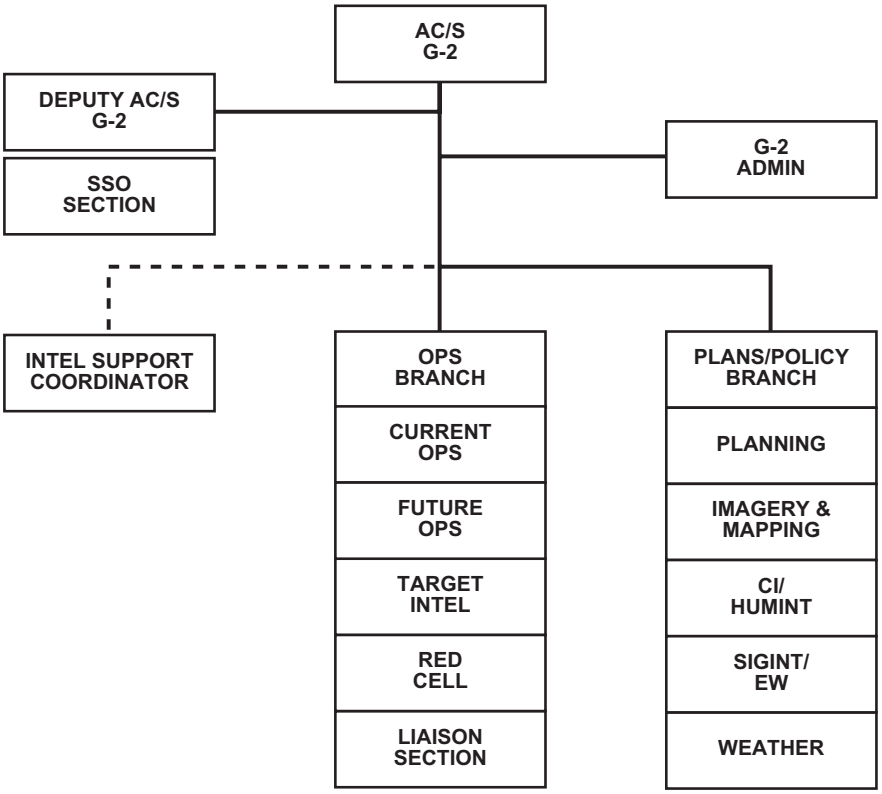

Figure III-3. MEF G-2 Section

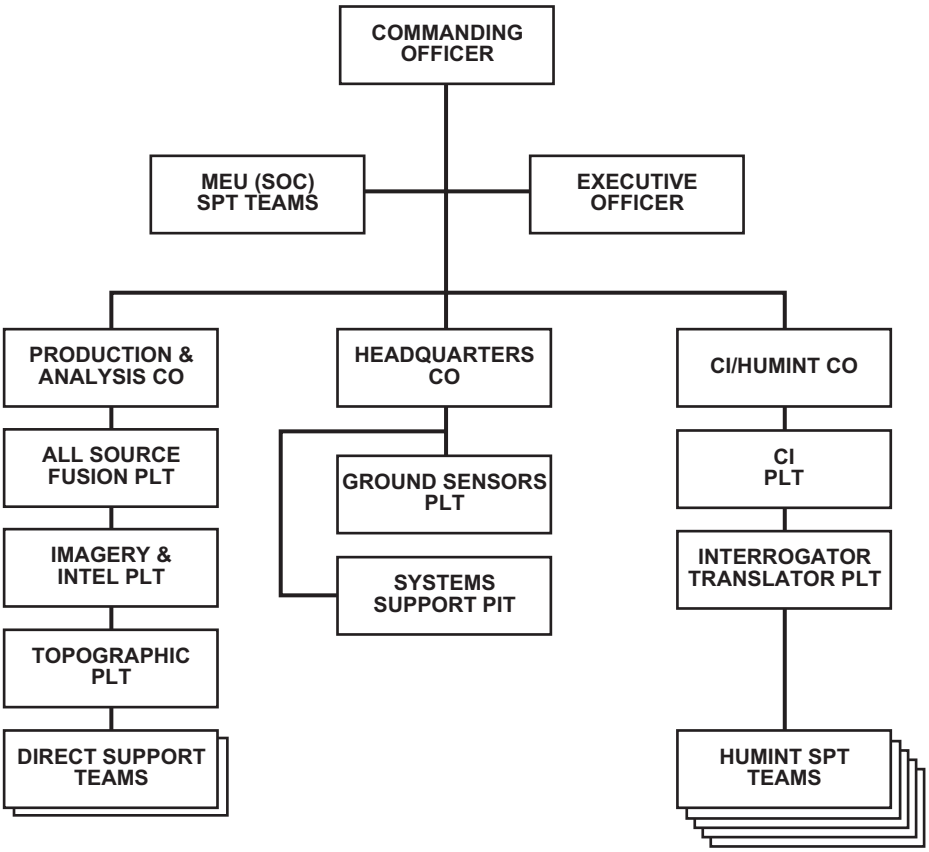

Figure III-4. Intelligence Battalion

Table III-2. Intelligence Battalion Capabilities	
Unit	**Intelligence Capabilities**
Imagery Interpretation Plt	Imagery Interpretation and Production
CI Plt or HUMINT Support Team	CI and HUMINT operations
IT Plt or HUMINT Support Team	Interrogation of Enemy Prisioners of War (EPW) and Document Exploitation
Ground Sensor Plt	Remote Ground Sensor operations
Topographic Plt	Geographic intelligence products
J-STARS ground sensor team	Target movement indicators, SAR

c. GCE. GCE intelligence efforts focus on the planning and execution of ground operations, with particular emphasis on locating, identifying, targeting, and attacking targets of interest to the commander. Organic reconnaissance, surveillance, and target acquisition assets assist this effort. These assets include:

(1) Light armored reconnaissance battalion.

(2) Reconnaissance battalion.

(3) Scout/sniper platoons.

(4) Counterbattery radar platoons.

(5) Forward Air Controller (FAC) and forward observers.

d. ACE. ACE intelligence operations facilitate friendly air operations and counter enemy air and air defense capabilities. The Aviation Combat Element contributes long-range reconnaissance and surveillance capabilities such as fixed and rotary wing aircraft (visual and imagery), UAV systems (imagery and video), EA-6B (communications and electronic intelligence), and air surveillance radar systems (electronic).

e. CSSE. CSSE intelligence operations focus on intelligence requirements concerning the terrain, infrastructure, medical threat, and rear-area threat. CSSE subordinate elements provide valuable information on terrain, the transportation network, key facilities, and the indigenous population in the AO.

7. AMCI Intelligence Operations

MEF and Corps intelligence requirements must support and be sensitive to needs of subordinate commands. For example, to support the notional army brigade mission, the MEF commander may need additional information on the enemy's antiarmor capability against M1A2 Abrams tanks. Similarly, the Corps commander may ask for more intelligence on the enemy's air defense threat to Marine AV-8 Harrier aircraft supporting the MEB.

a. Additional intelligence planning considerations include:

(1) Planning for intelligence communications transition that facilitates execution of branches or sequels to the plan or to accommodate shifting of the main effort from one force to another force.

(2) Identifying and establishing procedures and protocols for information that exchange between processors (databases, text, secondary, imagery, voice, and video).

(3) Identifying databases that each service possesses or has access to; determining which database(s) will support the operations, and if necessary, merging them into a single database and ensuring access by the entire force.

(4) Considering balancing availability of service-unique systems or capabilities. This may require the provision of additional resources by each service. Ultimate responsibility for allocating resources rests with the senior commander. Resources and capabilities are distributed based on the needs of the total force. For example, the bulk of Marine radio battalion assets may be committed to support the notional army brigade when the notional army brigade is designated the main effort. Conversely, it may be appropriate to employ the notional army brigade's only J-STARS ground station module (GSM) in support of the MEF during a particular phase of the operation.

Tables III-3 and III-4 portray the collection capabilities for both the notional army brigade and the MEB.

Table III-3. Notional Army Brigade Collection/Electronic Warfare (EW) Capabilities

Resource	Nominal Range
	10km 20km 30km 40km 50km 60km 100km
Ground Reconnaissance Scouts/FIST OH-58D*	
Radars and Sensors Q36 Radar Q37 Radar* EH-60* * If deployed with notional army brigade	
Joint Force Support J-STARS (GSM) Aerial Reconnaissance	

Table III-4. MEB Collection/EW Capabilities

Resource	Nominal Range
	10km 20km 30km 40km 50km 60km 100km
Ground Reconnaissance	
Force Recon	(100km)
LAR	(100km)
Division Recon	
Aerial Visual Reconnaissance	
Manned Aircraft	(300km)
UAV	(100km)
SIGINT/EW	
VMAQ	
Radio Battalion	
Radars and Sensors	
CB Radars	
Tactical Remote Sensor System	

b. Processing requirements must address interoperability between the Army, Marine Corps, theater, and national intelligence processing systems such as the Army ASAS, Marine Corps Intelligence Analysis System, Joint World Wide Intelligence Communications System (JWICS), and Joint Deployable Intelligence Support System (JDISS).

Chapter IV

MANEUVER

"Commanders with a poor understanding of the essence of maneuver; i.e., the union of efforts, prefer, most of all, to divide the area of their maneuver uniformly among their subordinates and demand the same results from all. It is a misfortune to be subordinated to such a 'corridor' commander. A completely opposite picture obtains with a good, efficient leadership...."

Mikhail Tukhachevsky

1. Background

Maneuver provides the opportunity to capitalize on the synergistic effects of a joint force. Specifically, joint maneuver forces the enemy to divide combat power against multiple directions and dimensions; permits the rapid shifting of forces to multiple locations as required by the tactical situation; and provides flexible, lethal options to shape and fight the battle to achieve joint objectives. Seizing, retaining, and exploiting the initiative through maneuver in either offensive or defensive settings interrupts the enemy's operational maneuver; spoils the timing of tactical operations by forcing an early culmination or diversion of resources; and ultimately creates opportunities for decisive defeat.

2. Notional Army Brigade Ground Maneuver Organizations

A notional army brigade's ground maneuver organization may consist of a combination of a mechanized infantry battalion and two tank battalions grouped under the command of the brigade headquarters as described in Chapter II. The brigade's maneuver elements fight the battle by destroying or disrupting enemy forces and seizing and holding terrain. Based on the estimate of the situation and METT-T/METT-TC, the notional army brigade commander task organizes the battalions into mechanized heavy, tank heavy, or balanced task forces (TF) tailored to accomplish specific missions. As a rule, the commander cross-attaches units at the battalion level. This is the lowest level provided with the necessary communications, logistics, and other support to ensure proper C2 of tailored combined arms formations.

a. Mechanized Infantry Battalion. The mechanized battalion consists of a HHC and three rifle companies as depicted in Figure IV-1. All battalion combat vehicles have cross-country mobility and armor protection. Once the battalion is configured as a TF, the TF commander may further task-organize companies into company teams for combat operations.

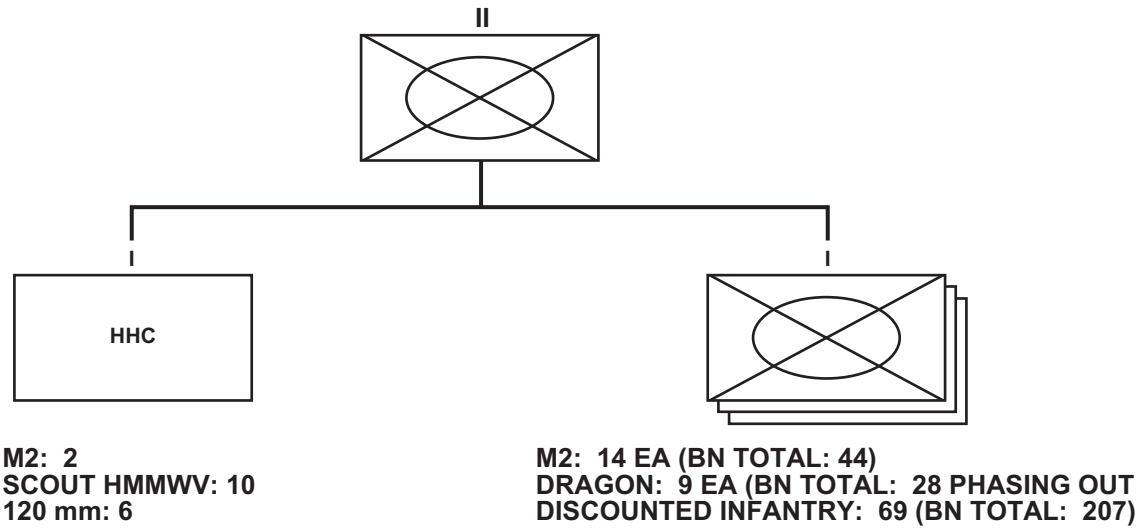

Figure IV-1. Notional Army Brigade Mechanized Infantry Battalion

(1) Rifle Companies. Each of the battalion's three rifle companies consists of a company headquarters with two M2 Bradley fighting vehicles (BFVs) and three rifle platoons of four M2s each. The M2 Bradley tube-launched optically tracked wire-guided (TOW) system and 25mm chain gun combine to provide a significant antiarmor capability. (See Table IV-1.)

Table IV-1. M2 Bradley Fighting Vehicle Characteristics

#Per Unit	Weapons	Maximum Effective Range (M)	Ammunition on Board	Fuel Use (Gal/Hour)	Capacity (Gallons)	Range (Miles)	Maximum Speed	Overcomes Obstacles
14 per Mechanized Infantry Company	TOW	3750	7	Idle: 8.4	175	300	Highway (HWY) 41	Vertical Step 3'
	25mm Chain Gun	APDS: 1700 HEI-T: 3000	225 675	Cross-country (XCTRY): 18.0			XCTRY 30	
	7.62 mm coax MG	900	2340					
	Smoke Grenade	30	16	Secondary Roads: 8.6				Trench Crossing Width 8'4"
	Passive Sight	2000+					Water 4.5	

(2) HHC. The HHC contains the staff sections, scouts, heavy mortars, and CSS elements.

(a) Scouts. The scout platoon features ten high-mobility multipurpose wheeled vehicles (HMMWVs) organized into a C2 section and four scout sections consisting of two vehicles each. Equipped with electro-optics that enhance reconnaissance and surveillance capabilities, the scouts serve as the TF

commander's eyes for situation development and awareness. They perform route, zone, area reconnaissance, and screening missions. They also assist movement of battalion units and facilitate TF C2 on the battlefield.

(b) Heavy Mortars. The battalion's six 120mm mortars are in the heavy mortar platoon. The platoon consists of a platoon headquarters, two M577 command post-mounted fire direction centers, and two sections of 120mm mortars of three tubes each. The platoon's ability to conduct split-platoon operations greatly enhances the options available to the TF commander in providing immediately responsive indirect fires in support of committed companies/teams. (See Table IV-2.)

Table IV-2. M1064A3 (120mm) Mortar Characteristics

#Per Unit	Weapons	Maximum Effective Range (M)	Ammunition on Board		Fuel Use (Gal/Hour)	Capacity (Gallons)	Range (Miles)	Maximum Speed	Overcomes Obstacles
6 per HHC Mortar Platoon	120mm Mortar	HE: 7200	48	69	Idle: 1.0 XCTRY 6.2 Secondary 8.9	95	300	40	Vertical 2' Trench 5'6"
		Illumination (ILL): 7100	14						
		WP: 7200	7						
	.50 cal	1200-1600	2000						

b. Tank Battalion. The tank battalion consists of a HHC and three tank companies as depicted in Figure IV-2. Like the mechanized battalion, once configured as a TF, the commander may elect to task organize at the company level.

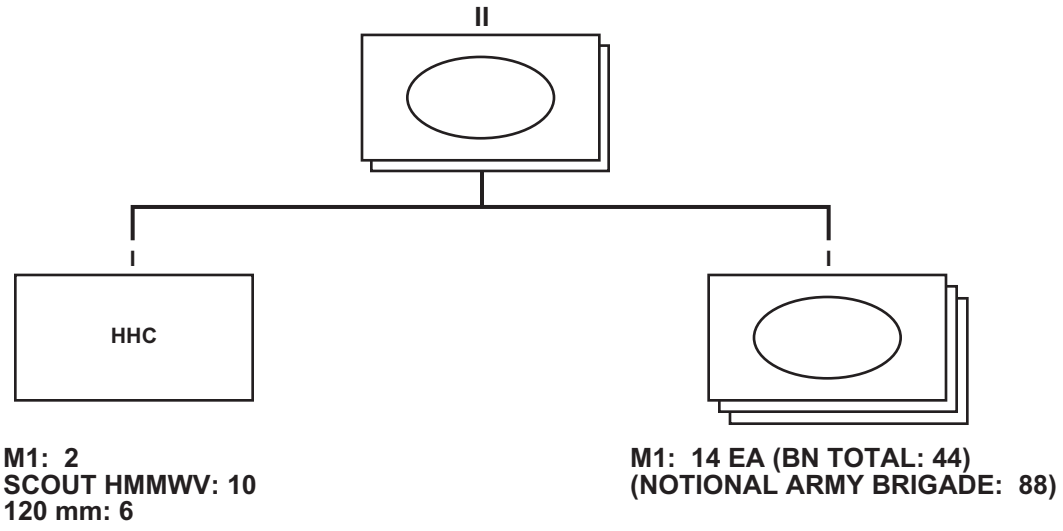

Figure IV-2. Notional Army Brigade Tank Battalion

(1) Tank Company. Each of the battalion's three tank companies consists of a company headquarters with two M1A2 Abrams tanks and three tank platoons with four M1s each, for a total of 14 tanks per company. The M1A2 provides the notional army brigade with the optimal antiarmor capability (See Table IV-3).

Table IV-3. M1A1 Abrams Tank Characteristics

#Per Unit	Weapons	Maximum Effective Range (M)	Ammunition on Board	Fuel Use (Gal/Hour)	Capacity (Gallons)	Range (Miles)	Maximum Speed	Overcomes Obstacles
14 per Tank Company	120mm	3500	40	Idle: 8.5	504.4	298	HWY 41.5	Vertical Step 3'6"
	.50 cal	1200-1600	900	XCTRY			41.5	
	7.62mm coax MG	900	11,400	56.6			XCTRY 30	Trench Crossing Width 9'
	Smoke Grenade	30	24	Secondary Roads 44.8				
	Thermals	2000+						

c. Other Supporting Organizations. Although not ground maneuver organizations, the notional army brigade's attached MP and chemical platoons support brigade operations.

(1) MP Platoon. MP support for the notional army brigade resides in the MP platoon attached to the HHC. The platoon's four squads perform the wide-range of MP missions. One squad provides security at the notional army brigade main CP; another squad operates the enemy prisoner of war (EPW) collection point; and the remaining two squads conduct battlefield circulation control and area security operations throughout the notional army brigade's rear area. All squads contribute to law and order operations.

(2) Chemical Platoon. The notional army brigade's attached chemical platoon provides the brigade with chemical reconnaissance support, a smoke generation capability, and the capacity to conduct limited, hasty, and deliberate decontamination operations.

3. Maneuver of the Notional Army Brigade

The notional army brigade can execute the range of offensive and defensive operations. The notional army brigade fights by task organizing its ground maneuver battalions into combined arms TF that prosecute the close fight. TF operate according to the notional army brigade commander's intent and concept of operation. Although focused primarily on the close fight, the notional army brigade can C2 deep operations when given aviation and CS assets. As discussed in Chapter III, the MEF must provide in-depth intelligence about the enemy so the notional army brigade can exploit enemy weaknesses and maintain the initiative. The notional army brigade performs security operations by assigning tasks to its TF and by using available augmentation assets such as Army aviation. TF employ organic

scouts and attached resources for reconnaissance and security missions in support of the TF and brigade commanders. Notional army brigade rear operations consist of protecting units behind committed TF, ensuring continuous CS and CSS, maintaining freedom of movement for uncommitted forces, and securing CPs and support areas.

a. Tactical Maneuver.

(1) IPB. IPB focuses on the notional army brigade's close battle and objective area. IPB must extend beyond notional army brigade boundaries and areas of interest, given the probability the notional army brigade will revert to reserve or be directed into an adjacent sector during an operation. IPB must detail lateral routes and cross-country avenues of movement that connect primary approaches. Avenues that parallel main axes also merit consideration for use during meeting engagements and in bypassing enemy defenses.

(2) Maneuver Techniques. Within the zone, the notional army brigade commander concentrates attacks against enemy weaknesses along an avenue that offers rapid access to the objective area. The notional army brigade will not normally clear its zone unless specifically directed. When in contact with an enemy force requiring attack by more than one TF, the notional army brigade employs the TF as maneuver and support by fire elements. TF and uncommitted units remain within supporting distances of each other in brigade formations. Although such mutual support does not require mutual observation, it does mean that the notional army brigade commander must retain the ability to concentrate TF when and where required. Committed TF maneuver in zones wide enough to allow them some freedom of action and far enough apart to give the brigade multiple routes of advance. TF should be able to mass fires in a single terrain compartment when attacking, acting as the notional army brigade base of fire, or when defending. Uncommitted TF normally follow the main attack closely to support within 30 minutes. (See Table IV-4.)

Table IV-4. Notional Army Brigade Maneuver Space Requirements

Unit	Offense (km) (Zone Width)	Defense (km) (Sector Width)
Notional Army Brigade (Main Effort)	5-15	3-15
Notional Army Brigade (Supporting Effort)	5-25	5-25
Task Force (Main Effort)	4-8	4-8
Task Force (Supporting)	4-8	4-8
Brigade Support Area	7 km (Open)	5 km (Restrictive)
Brigade Depth		25-50

(3) Zone Considerations. The notional army brigade requires a zone of at least two TF size corridors. The zone should contain terrain that allows the TF commander to maneuver their company teams and, at the same time, permit the notional army brigade commander to mass those TF abreast when required. Ideally,

the zones contain at least one good quality road to support rapid movement of uncommitted units behind lead units and the main supply route. Table IV-5 provides some *rules of thumb* for planning terrain allocation and unopposed movement rates. METT-T/METT-TC will dictate actual employment options.

Table IV-5. Unopposed Movement Rates

Type Terrain	Dismounted Infantry	Armored/Mechanized
Unrestricted	4 kmph (day) 3.2 kmph (night)	24 kmph (day) 24 kmph (night with lights / passive)
Restricted	2.4 kmph (day) 1.6 kmph (night)	16 kmph (day) 8 kmph (night, blacked out)
Severely Restricted	1.0 kmph (day) 0.1 to 0.5 kmph (night)	1.0 kmph (day) 0.1 to 0.5 kmph (night)

(4) Control Measures. The notional army brigade uses measures assigned by the MEF to control its operations. Graphical control measures extend beyond objectives and to the flanks to facilitate execution and transition to subsequent missions. The notional army brigade augments assigned graphics with TF assembly areas, attack positions, zones, sectors, objectives, axes, battle positions, fire support coordination measures, phase lines, and other control measures as necessary to execute the notional army brigade commander's intent and concept of operation. The notional army brigade also employs checkpoints, target reference points, and on-order positions, axes, and objectives to facilitate flexibility in the maneuver plan during operational execution.

4. MEB Maneuver Organizations

A notional MEB GCE is structured around a Marine infantry regiment. The infantry mission is to locate, close with, and destroy the enemy by fire and maneuver. The regiment consists of a headquarters company and three rifle battalions as shown in Figure IV-3. Major supporting elements include an artillery battalion, a tank battalion, a light armored reconnaissance company, and an AAV company.

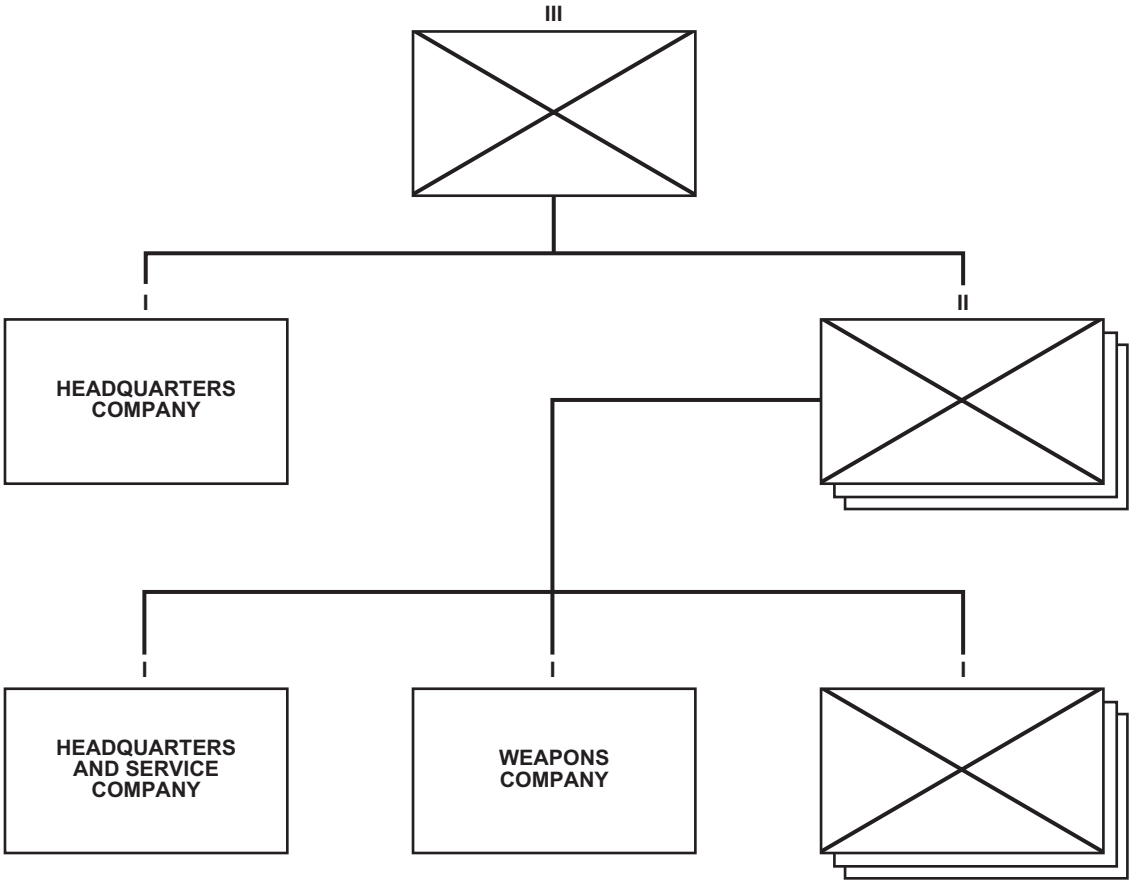

UNIT	USMC OFF	USMC ENL	USN OFF	USN ENL	TOTAL
INFANTRY REGIMENT	174	3451	11	205	3841
REGIMENT HQ CO	24	298	2	7	331
INFANTRY BATTALION (X3)	44	859	3	66	972
HQ AND SERVICE CO	21	182	3	66	272
WEAPONS COMPANY	5	149			154
RIFLE COMPANY (X3)	6	176			182

Figure IV-3. Marine Infantry Regiment

a. Artillery Battalion. The MEB artillery battalion provides indirect fires for supported units of the regiment. See Chapter V for detailed discussion.

b. Tank Battalion. The tank battalion supports the MEB by destroying enemy forces, fortifications, material, and by providing antimechanized fires in support of committed units. Marine and Army armor and mechanized infantry doctrine are similar; however, in some cases, Marine armor units are task organized below the company level. Since the Marine Corps has few tank battalions, it rarely employs them tank pure; rather, they are typically task organized to reinforce infantry units. Thus, in contrast to the Army's concept of employment that generally attempts to

achieve mass by task-organizing tank units no lower than company level, Marine commanders may employ tanks individually to support committed infantry units when required. The MEB's supporting tank battalion consists of 58 M1A1s organized with a headquarters (two tanks) and four companies of fourteen tanks each.

c. Light Armored Reconnaissance (LAR) Company. LAR units conduct reconnaissance, security, and economy of force missions. LAR units avoid sustained combat as their value is derived from a high degree of mobility. This mobility enables them to operate on extended frontages at considerable distances from the main force and to strike sudden blows at enemy weak points. LAR's firepower, combined with mobility, make it an effective means of conducting delaying actions over considerable fronts and depths. Figure IV-4 portrays the LAR Company.

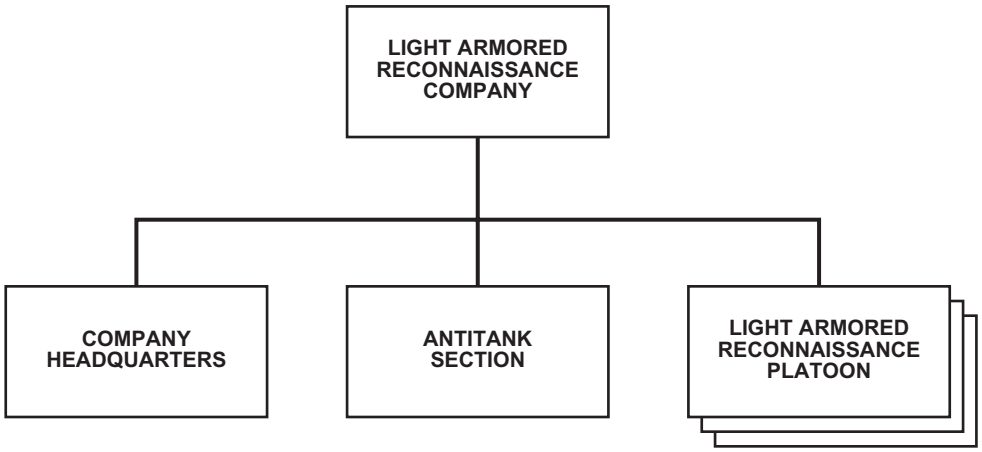

Figure IV-4. Light Armored Reconnaissance Company

d. AAV Company. AAVs transport the surface assault elements of the landing force from amphibious shipping to inland objectives in a single lift during the amphibious assault, provide support to mechanized operations ashore, and provide CS for other operations requirements. During operations ashore, AAV units are used principally to improve the tactical mobility of infantry and engineer units. Additionally, AAVs provide the supported unit with limited firepower and limited armor protection.

5. Maneuver of the MEB

The Marine style of C2 is to make every effort to speed the tempo of planning and execution. With this background in mind, the following paragraphs describe the MEB approach to maneuver.

Marine Corps Doctrinal Publication (MCDP) 1, Warfighting, states—"*The traditional understanding of maneuver is a spatial one; that is, we maneuver in space to gain a positional advantage. However, in order to maximize the usefulness of maneuver, we must consider maneuver in time as well; that is, we generate a faster operational tempo than the enemy to gain a temporal advantage. It is through*

maneuver in both dimensions that an inferior force can achieve decisive superiority in the necessary time and place."

a. Tactical Maneuver. The AAVs, combined with other assets available within MEB, enable the commander to configure tailored mechanized forces as discussed below:

(1) Organization. A mechanized force is organized around a nucleus unit. The force is constructed as tank heavy, infantry heavy, or balanced. A tank heavy unit is employed when the shock action of armor is called for by the enemy situation and facilitated by more open terrain. An infantry heavy unit is employed when the shock action of armor is less important or when the operation is conducted in more restricted terrain such as mountainous or built-up areas. When the enemy situation is unclear and maximum flexibility is desired, a balanced force of generally equal proportions is employed.

(2) Elements of a Mechanized Force. A Marine mechanized infantry force consists of infantry units mounted in AAVs. AAVs are not armored personnel carriers; therefore, infantry will normally not fight mounted. Tanks are normally attached or placed OPCON of the mechanized unit, or the mechanized unit is attached or placed OPCON of the tank unit. This allows the commander to task-organize forces per METT-T/METT-TC. The mechanized or tank force is supported by artillery and air and reinforced with LAR, engineer, and air defense units as appropriate, per METT-T/METT-TC.

b. Tactical Mobility. Tactical mobility is used to describe the mobility available to a unit via its organic transportation assets and abilities. Mechanized assets in the Marine Corps are limited in number and transportation capability; therefore, the GCE commander will seldom mechanize the entire force. As a result, a mechanized force requires a major portion of the MEB's mobility assets. Marine infantry mobility is limited during dismounted operations. Infantry unit mobility is enhanced during mechanized or helicopterborne operations with the use of AAVs or MEB aviation assets. Organic to the GCE for support of movement and maneuver are artillery and combat engineer units that also possess surface mobility assets. Mobility assets are not specifically dedicated to any one element of the MEB; rather assets are allocated by the MEB/GCE commander based on operational requirements. Table IV-6 illustrates MEB mobility assets and capabilities.

Table IV-6. MEB Mobility Assets

Mobility Asset	Maximum Number Available	# Personnel
CH53	16	30
CH46	24	15
LVTP (AAVs)	109	20
Mxxx (Trucks)	TBP	TBP
KC-130*	12	92

* Normally used for refueling operations

c. Helicopterborne Operations. Helicopterborne operations are an integral part of MEB operations and provide the joint force with significant capabilities regarding both tactical movement and maneuver. Assault helicopters provide mobility to achieve tactical surprise and to move forces regardless of terrain, obstacles, or barriers. This mobility allows forces to rapidly maneuver to achieve positional advantage over the enemy and quickly apply combat power where and when needed. The inherent speed, maneuverability, and firepower of attack helicopters further enhance the commander's ability to quickly mass combat power to destroy enemy forces. Chapter VII discusses helicopterborne operations in further detail.

6. Integrated Maneuver and Complementary Capabilities

Chapter I detailed the capabilities and limitations of the notional army brigade and MEB at the macro level. Tables IV-7 through IV-12 describe the complementary operational capabilities of the MEB and Army notional army brigade across a range of combat operations. In addition to providing a menu of employment options, the tables further underscore the recurring theme that the capabilities of one force counterbalance the limitations of the other.

Table IV-7. AMCI Operations Complementary Capabilities

Operation	MEB	Notional Army Brigade
Amphibious Operations	Conduct amphibious assaults, raids, demonstrations, and withdrawals.	Support amphibious operations (except assault phase) as mobile defensive, counterattack, or breakout force.
	Conduct air operations in support of forcible entry and follow-on combat operations.	Transition to follow-on offensive operations.
	Transition to follow-on offensive operations.	
Passage of Lines	Assist in C2 of passage.	Assist in C2 of passage.
	Clear obstacles from attack positions through passage lanes/mark mines.	Clear obstacles from attack positions through passage lanes/mark mines.
	Overwatch passage.	Overwatch passage.
	Infiltrate to tactical depth.	Act as MEF multifunctional reserve.
		Transition rapidly to exploit successful passage.

Table IV-8. AMCI Operations Complementary Capabilities		
Operation	**MEB**	**Notional Army Brigade**
Movement to Contact	Conduct air reconnaissance, offensive air cover, antiair, and EW operations	Conduct reconnaissance in force
	Conduct covering force operations	Conduct covering force operations
	Conduct security operations	Conduct security operations
	Fight meeting engagement	Fight meeting engagement
	Seize assigned objectives	Seize assigned objectives
	Quickly transition to attack or defense	Quickly transition to attack or defense
	Execute vertical assault to seize objectives	Fix/defeat enemy mounted and dismounted forces (consider dismounted infantry numbers)
	Clear and secure restricted terrain	
	Fix/defeat enemy dismounted forces	Act as multifunctional reserve

Table IV-9. AMCI Operations Complementary Capabilities		
Operation	**MEB**	**Notional Army Brigade**
Attack	Conduct dismounted hasty or deliberate attack as main/supporting effort	Conduct mounted hasty or deliberate attack as main/supporting effort
	Perform economy of force operations	Perform economy of force operations
	Fix/defeat bypassed enemy forces	Fix/defeat bypassed enemy forces
	Conduct offensive air operations	Conduct MOUT (consider dismounted infantry numbers)
	Conduct dismounted attacks over restrictive terrain	Conduct deep air maneuver operations with Army aviation augmentation
	Seize objectives through vertical envelopment/assault	Act as multifunctional combined arms reserve
	Conduct military operations on urbanized terrain (MOUT)	Rapidly concentrate combat power to exploit enemy weaknesses
	Support deception	Attack to linkup with friendly forces Isolate objectives
		Defeat enemy mobile reserves
		Support deception

Table IV-10 AMCI Operations Complementary Capabilities		
Operation	**MEB**	**Notional Army Brigade**
Breaching Operations	Secure the near side	Secure the near side
	Pre-breach/breach obstacles	Pre-breach/breach obstacles
	Support breaching and assault forces with over-watching suppressive fires	Provide support, breaching, and/or assault forces
	Prepare/mark lanes	Prepare/mark lanes
	Infiltrate enemy defenses	Conduct in-stride or deliberate breaching operations
	Clear enemy defending obstacles (consider dismounted infantry numbers)	Clear enemy defending obstacles
	Conduct/support deception operations	Conduct/support deception operations
	Conduct in-stride or deliberate breaching	Conduct in-stride or deliberate breaching
River Crossing Operations	Secure the near side	Secure the near side
	Conduct far side reconnaissance	
	Provide over-watching fires	Provide over-watching fires
	Execute waterborne assault crossing to secure the far side	Conduct crossing with engineer augmentation
	Execute vertical assault to seize objectives/secure the far side	
	Conduct/support deception operations	Conduct/support deception operations
	C2 crossing operation	C2 crossing operation

Table IV-11. AMCI Operations Complementary Capabilities		
Operation	**MEB**	**Notional Army Brigade**
Defend	Execute covering force mission	Execute covering force mission
	Conduct counter-reconnaissance operations	Conduct counter-reconnaissance operations
	Conduct security operations	
	Conduct range of defensive air operations	Conduct security operations
	Conduct raids, ambushes, or spoiling attacks	Conduct limited deep operations (consider mix of aviation and artillery assets)
	Block dismounted enemy avenues of approach; block mounted routes in restricted terrain	Conduct raids, ambushes, or spoiling attacks
	Execute vertical assault to seize key objectives	Block enemy avenues of approach
	Conduct positional defense	Conduct mobile or area defenses
	Occupy positions in depth, including strong points	Defend in depth
	Respond to rear area threats	Respond to rear area threats
	Conduct MOUT	Act as multifunctional reserve
	Perform economy-of-force role	Conduct MOUT (consider dismounted infantry numbers)
	Assist in deception	Perform economy-of-force role
		Assist in deception

Table IV-12. AMCI Operations Complementary Capabilities		
Operation	**MEB**	**Notional Army Brigade**
Retrograde	Delay along likely enemy dismounted avenues of approach	Execute delay in depth
	Assist disengagement using air assets	Assist disengagement using air assets if augmented with aviation
	Conduct limited counterattacks to assist disengagement	Counterattack to assist disengagement
	Block/reinforce subsequent delay positions	Block/reinforce subsequent delay positions
	Cut enemy LOCs; attack enemy CS and CSS units/assets	Maneuver rapidly to prevent enemy envelopment
	Assist with execution of obstacles planned in depth	Cut enemy LOCs; attack enemy CS and CSS units/assets
	Secure critical nodes	Perform rear guard function; protect withdrawal of main body
	Conduct MOUT	Act as multifunctional reserve
		Assist with execution of obstacles planned in depth
		Secure critical nodes
		Conduct MOUT (consider dismounted infantry numbers)

d. Planning Considerations. Commanders and their staffs must recognize the differences inherent in the ground maneuver elements. These differences fall ~~in~~ primarily into three areas: *mobility differential*, *survivability differential*, and *firepower differential*. Operations planning should accommodate these differences accordingly.

(1) Mobility Differential. The notional army brigade can move much faster (in short bursts and for sustained periods) than the MEF's GCE. This differential stems from cross-country capabilities/speed of notional army brigade's organic vehicles. The GCE, in mounted operations, uses AAVs and trucks to carry infantry; artillery units use trucks to tow organic howitzers. Rapid movement is achieved during helicopterborne operations. AAVs are not designed for sustained rapid overland movement. Table IV-13 shows planning movement rates for various type units. (Units cannot sustain these rates for 24 hours. These rates are reduced by one-half at night.)

Table IV-13. Opposed Rates of Movement in Km/h												
Degree of Resistance Attacker to Defender Ratio	Prepared Defense						Hasty Defense/Delay					
	Unrestricted Terrain		Restricted Terrain		Severely Restricted Terrain		Unrestricted Terrain		Restricted Terrain		Severely Restricted Terrain	
	Armor/ Mech	Inf	Armor/ Mech	Inf	Armor/ Mech	Inf	Armor/ Mech	Inf	Armor/ Mech	Inf	Armor/ Mech	Inf
Intense Resistance 1:1	.6	.5	.5	.3	.16	.1	1.0	.8	.8	.5	.4	.2
Very Heavy 2:1	.9	.6	.6	.4	.3	.2	1.5	1.0	1.0	.7	.6	.3
Heavy 3:1	1.2	.7	.75	.5	.5	.3	2.0	1.2	1.3	.9	.8	.5
Medium 4:1	1.4	.8	1.0	.6	.6	.5	2.4	1.4	1.75	1.1	.9	.8
Light 5:1	1.5	.9	1.1	.7	.7	.6	2.6	1.6	2.0	1.2	1.0	.9
Negligible 6+: 1	1.7+	1.0+	1.3+	.8+	.8+	.6+	3.0+	1.7+	2.3+	1.3+	1.1	1.0

(2) Survivability Differential. Because of its vast number of armored assets, the notional army brigade has greater overall armored protection than the GCE. Except for the M1A1s (and LAVs to some extent), Marine vehicles (including the lightly armored AAVs) are methods of transportation and normally not used for mounted combat. Towed artillery is also more vulnerable to counterfire than self-propelled (SP) artillery.

(3) Firepower Differential. Marines rely upon organic air assets much more than the Army does. The notional army brigade relies primarily upon direct fire weapons, mortars, artillery, and, when attached, attack helicopters.

e. Maneuver Employment Options. The following employment options maximize the complementary capabilities of the MEB and notional army brigade through the execution of integrated operations.

(1) Notional Army Brigade and the MEF. The notional army brigade is effective either as the main or supporting effort in both offensive and defensive situations. It is particularly well suited to perform reserve roles because its mobility and firepower allow it to strike the enemy at the critical time and place to seize or regain the initiative through the destruction of the enemy force. Also, the notional army brigade can stop penetrations or incursions into the MEF rear area.

(2) MEB and the Corps. The MEB presents the Army Corps with a wide array of employment options and provides significant capabilities not available within the corps. When employed as a MAGTF, the MEB gives the commander the flexibility of an "*enabling force*" to create opportunities for corps mechanized assets to exploit. The MEB is highly effective when conducting amphibious operations in littoral contingency areas. The MEB is also capable of conducting sustained operations ashore by attacking enemy light forces in all types of terrain, seizing key terrain, and defending against mechanized enemy forces in close terrain. The MEB provides the Army commander with a formidable force during periods of darkness or limited visibility and in restrictive terrain. It is also well suited for conducting special purpose operations including reconnaissance, ambushes, raids, feints, demonstrations, and counter-reconnaissance.

f. Weapons Systems. Table IV-14 reflects the types and quantities of weapons systems typically found in the MEB and notional army brigade. The table does not include secondary weapon systems (i.e., machine guns on tanks, etc.). The exact number and type of systems depend on the actual force package provided for a particular contingency. The table further underscores the complementary nature of Army and Marine Corps forces and the accompanying benefits derived from integrated operations.

Table IV-14. Major Weapons and Aircraft Summary		
Weapon System		**Notional Army Brigade**
Tanks (Abrams)	58	88
BFVs	-	44
AAVs	109	-
LAVs	24	-
MLRS	-	6
155mm Howitzers	18-30	18
120mm Mortars	-	18
81mm Mortars	24	-
60mm Mortars	36	-
MK-19 40mm Grenade Launchers	114	30
TOW Launchers (not including LAV or BFV mounted)	72	-
Dragon Launchers	phasing out	27 (phasing out)
Javelin	24	81
Avenger Missile Teams	60	12
Stinger Missile Teams	45	5
AV-8Bs	20	-
F/A-18A/Cs	24	-
F/A-18Ds	12	-
EA-6Bs	6	-
CH-53E	28	-
AH-64 (when notional army brigade is augmented)	-	24
AH-1W	12	-
CH-46E	48	-
UH-60 (when notional army brigade is augmented)	-	8
UH-1	12	-
OH-58D (when notional army brigade is augmented)	-	8
KC-130	6	-

Chapter V

FIRE SUPPORT

1. Background

This chapter focuses on the force multiplier of fire support. It defines fire support and related terms to establish a common point of reference for subsequent discussions. It also offers fire support TTPs to support integrated combat operations.

2. Fire Support Coordinating Measures (FSCMs)

The Army and Marine Corps recognize and use a common set of FSCMs. They are used to expedite target attack, protect the force, safeguard noncombatants and sites of religious or cultural significance, preserve infrastructure, and set the stage for future operations.

3. Notional Army Brigade Fire Support Operations

a. Field Artillery (FA) Command Structure. Field artillery is organized at corps, division, and brigade levels with a specific command and control structure that enables the field artillery commander to accomplish dual responsibilities as a FSCOORD (the USMC uses FSC) and an artillery commander. There is a field artillery headquarters and headquarters battery (HHB) in each corps artillery, division artillery, field artillery brigade, and each close support field artillery battalion such as the notional army brigade's supporting artillery battalion. At each level, the HHB provides both a CP for the command and control of field artillery units and the nucleus of a FSE that operates as part of the supported maneuver CP. Both are supervised on a full-time basis by the field artillery commander's designated representatives. Operations officers normally run the artillery CPs. At the corps and division levels, the deputy fire support coordinator (DFSCOORD) supervises FSEs, while the fire support officers (FSOs) supervise FSEs at the brigade level and below. Table V-1 depicts Army fire support coordination organizations and FSCOORDs from corps down to company levels.

Table V-1. Army Fire Support Coordination Organizations and Coordinators

Echelon	Fire Support Organization	FSCOORD
Corps	FSE	Corps Artillery Commander
Division	FSE	Division Artillery Commander
Brigade	FSE	FA Battalion Commander
Battalion	FSE	Fire Support Officer
Company	Fire Support Team (FIST)	FIST Team Chief

b. Notional Army Brigade Fire Support Coordination Organizations and Coordinators. The commander of the DS artillery battalion also functions as the notional army brigade FSCOORD. This individual establishes a fire support section comprised of an FSO, fire support noncommissioned officer (NCO), and several fire support specialists that operate from an M577 CP vehicle as part of the notional army brigade's main CP. The fire support section serves as the nucleus of the FSE. Additional members of the FSE may include an ALO, an engineer representative, a chemical officer, and the S3 air. Each maneuver battalion tactical operations center features a similarly configured FSE. The Fire Support Team (FIST) coordinates fire support at the company level. A FIST headquarters supports each company of a tank battalion. The FIST for the mechanized infantry battalion consists of a FIST headquarters (FIST chief serves as company FSO) and three FOs parties per company. Although FSEs and FISTs are organic to artillery organizations, once deployed they remain with supported maneuver units regardless of the tactical missions assigned to their parent artillery units. FISTs operate from the M981 fire support team vehicle (FIST-V) equipped with the ground/vehicular laser locator designator (G/VLLD); forward observers (FO) parties operate with and are transported by their supported maneuver platoons. Figure V-1 illustrates the notional army brigade's supporting fire support coordination organizational structure. Also depicted are three COLTs. COLTs do not serve a specific fire support coordination function; however, because they are valuable assets designed to maximize employment of smart munitions, C2 of the COLTs is normally retained at the notional army brigade.

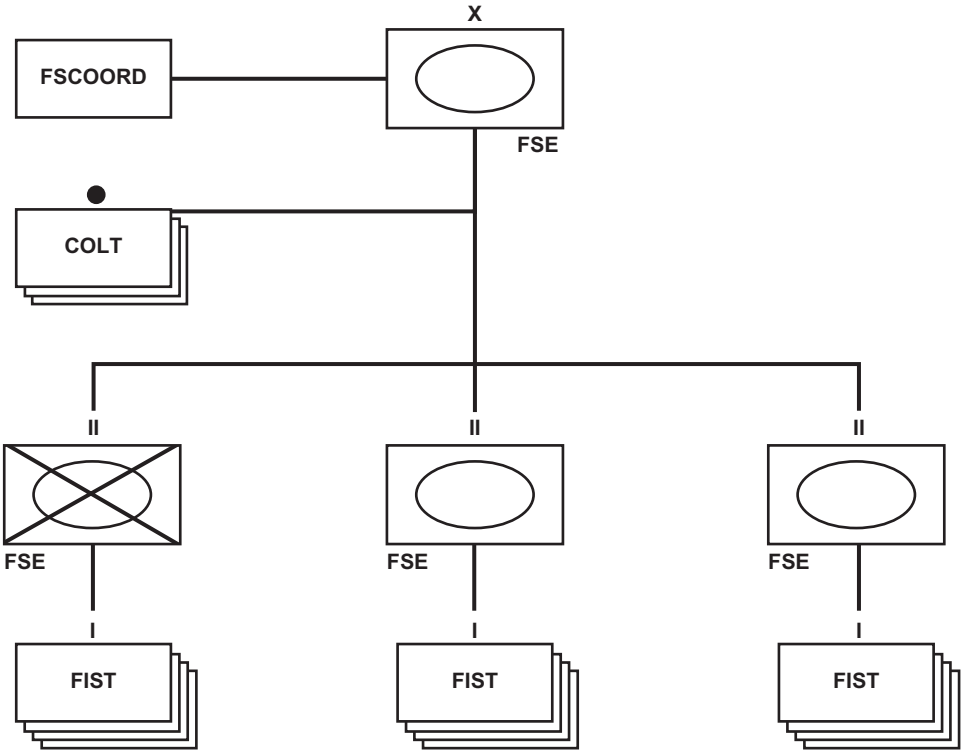

Figure V-1. Notional Army Brigade Fire Support Coordination Organizations

c. Notional Army Brigade Fire Support Attack Assets.

(1) Field Artillery. Each committed maneuver brigade in the Army has a habitually associated field artillery battalion in DS. Although the notional army brigade currently receives its DS artillery fires from an M109A6 "*Paladin*" howitzer, the MLRS battery (if attached as assumed for the purposes of this publication) provides reinforcing fires. Figure V-2 depicts the notional army brigade's supporting field artillery organization.

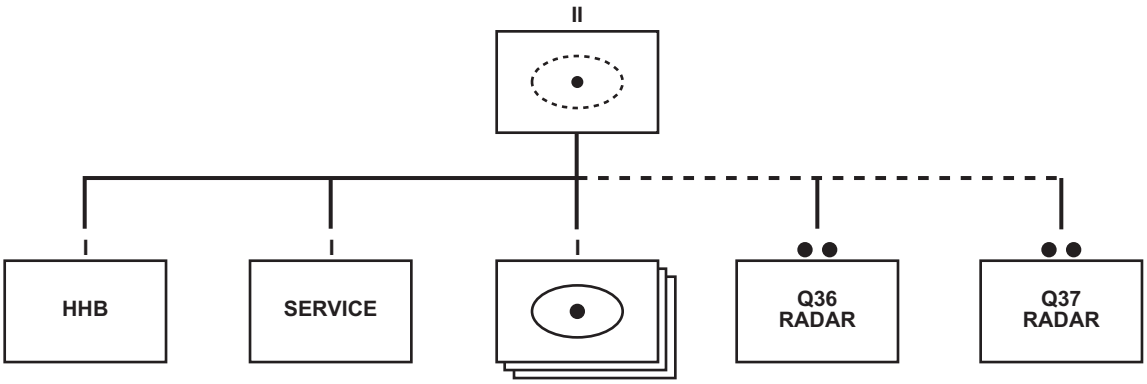

NOTES
1. **HHB provides the personnel and equipment to perform fire support coordination for the notional army brigade (4 FSEs, 12 FISTVs, 3 COLTs) and to C2 the battalion's attached, organic, and reinforcing units.**
2. **Service Battery provides all classes of supply (less Class VIII) and services to support organic and attached units.**
3. **Firing Batteries have 6 howitzers (M109A3/A6s), 8 Field Artillery Ammunition Supply Vehicles (M992 FAASVs) and 2 Fire Direction Centers (FDCs) (M577s) organized in two platoons capable of semi-autonomous operation. (Total of 18 howitzers in battalion.**
4. **Battalion tactical operations center commands and controls attached radars.**

Figure V-2. Notional Army Brigade Field Artillery Organization

(a) M109A6 "*Paladin*" Howitzer. An automatic fire control system includes position navigation and a ballistic computer that does on-board technical fire direction enabling it to respond to calls for fire in less than two minutes. Its range advantage over the M109A3 is 4.6km for unassisted projectiles and 6.5km for rocket assisted projectiles. Because the Paladin can rapidly occupy a firing position, shoot, and displace, its vulnerability to counterfire is significantly reduced.

(b) MLRS. MLRS provides the commander with a significant capability for executing counterfire, interdiction, and assisting in SEAD. The MLRS is well suited for attacking large area targets; recommended target sets include personnel, self-propelled artillery, air defense systems, infrastructure and lightly protected

combat, CS, and CSS systems. To support deep operations, the Army Tactical Missile System (ATACMS) capable MLRS battery can attack high payoff targets at ranges from 25 to 300 km. (ATACMS ammunition comes in missle pods similiar to normal MLRS missiles, but they must be ordered separately as ammunition since they do not automatically come with a MLRS unit.) The system can also assist in SEAD to support air interdiction and/or deep operations.

• Firepower. MLSR provides significantly increased attack potential over the 155mm howitzer. Table V-2 presents a firepower comparison between MLSR and the 155mm howitzer.

Table V-2. Firepower Comparison of MLRS and 155mm Howitzer

	MLRS	M109A3 (155mm)
Range*	32 km	18.5 km
Submunition	644 per rocket	88 per round
Equivalent	1 rocket	7.32 rounds
Equivalent	1 launcher load (12 rockets)	3.6 battalion volleys (88 rounds)
Equivalent	1 battery (9 launchers, 108 rockets)	33 battalion volleys (792 rounds)

* For Dual Purpose Improved Conventional Munitions

• Interoperability. The MLRS interfaces with many types of C2 systems. The fire direction center (FDC) at platoon, battery, and battalion levels can interface directly with the Interim Fire Support Automation System (IFSAS), digital message devices, other FDCs, Cannon Battery Computer System (CBCS), AFATDS, Airborne Target Handover System (ATHS) on the OH-58D, and the CGS—the ground link to J-STARS.

• System Characteristics. MLRS features an on-board, self-location, directional control, ballistic computation, and digital communications system in one piece of equipment. The system consists of M270 launchers; launcher pods; ammunition resupply vehicles and trailers; and C3 system. Each launcher has the on-board capability to receive a fire mission, self-locate, compute firing data, orient on the target, and deliver up to 12 rockets. All 12 rockets can be fired in less than 60 seconds at single or multiple aim points. Rockets can be fired individually or a designated number can be fired at specified intervals. To improve response time and facilitate target engagement, the MLRS interfaces directly with target acquisition assets.

• Ammunition Resupply. Ammunition resupply of the battery's nine launchers occurs with the 12 M985 heavy expanded mobility tactical trucks (HEMTTs) and 12 M989A1 heavy expanded mobility ammunition trailers (HEMATs) assigned to the battery's ammunition platoon. Each HEMTT/HEMAT combination can carry 48 rockets (8 pods).

• Organization. Figure V-3 depicts the organizational structure of the notional army brigade's supporting MLRS battery.

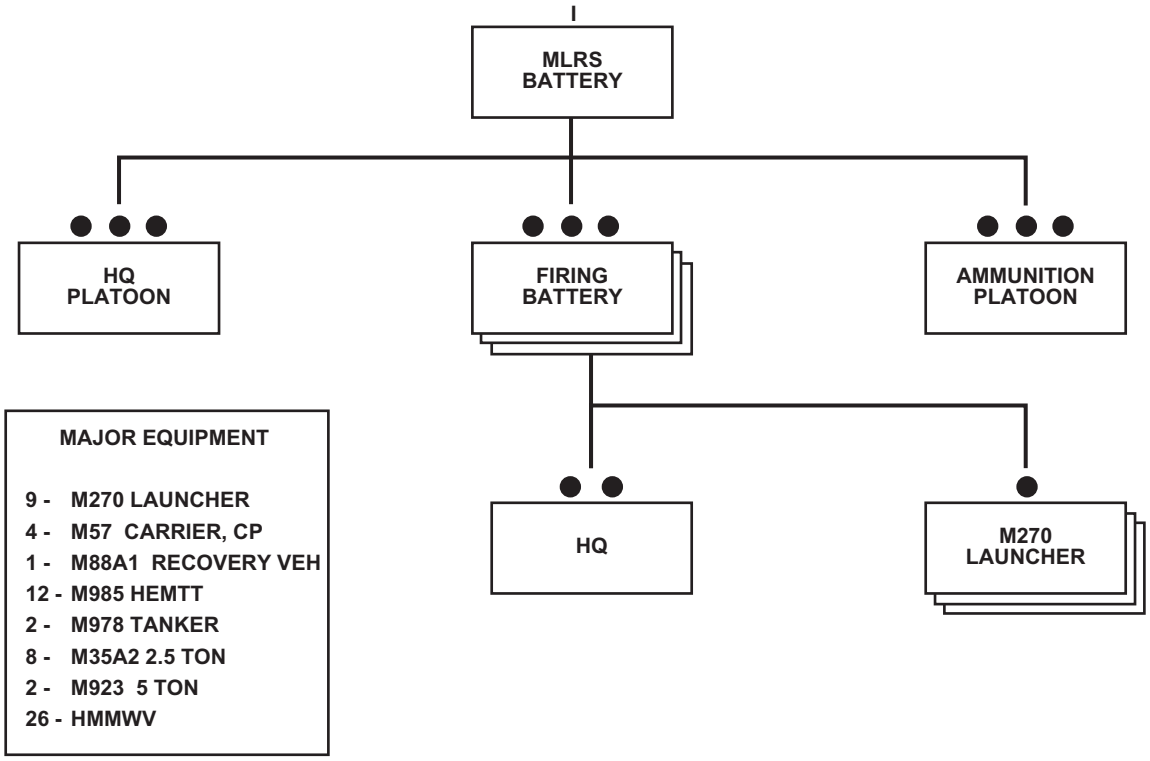

Figure V-3. Multiple Launch Rocket System (MLRS) Battery

(2) Mortars. Each of the notional army brigade's three ground maneuver battalions features a company of six 120mm mortars. The company provides dedicated, immediately responsive fires in support of battalion/task force operations.

(3) EW Assets. Chapter III described notional army brigade EW systems and assets capabilities.

(4) USAF Air Support. USAF fixed-wing air support is coordinated through the brigade and battalion ALOs/S3 air and corresponding tactical air control parties (TACPs). See Chapter VII for additional discussion.

d. Notional Army Brigade Target Acquisition Assets. The notional army brigade features a variety of target acquisition assets ranging in scope from the FISTs to national-level collection assets. As shown in Figure V-1, the notional army brigade has a full complement of FISTs attached to the maneuver companies and three COLTs available for employment at brigade level. An AN/TPQ-36 weapons-locating radar may support the artillery battalion's operations; target acquisition range more than doubles (from 24 to 50 km) if the AN/TPQ-37 weapons-locating radar is available for support. The notional army brigade may also have aerial assets (OH-58D helicopters) from supporting Army aviation units. Finally, the brigade has a direct link to targeting intelligence developed by higher headquarters through the intelligence architecture described in Chapter III.

4. Army Aviation

The notional army brigade may be augmented by Army aviation assets as described in Chapters I and VII. Attack helicopters are most effective when employed in mass (battalions or companies) in an air maneuver role against enemy armor or artillery formations or against other high payoff combat, CS, or CSS target sets. The division's aviation brigade's primary mission is to engage and destroy threat armored and mechanized forces. When necessary, Army aviation can support by fire other maneuver units, coordinate and adjust indirect fires, conduct joint air attack team operations, and C2 deep operations.

5. MEB Fire Support Operations

a. MEB fire support coordination agencies include the FSCC at the MEB CE and FSCCs at the regiment and each battalion. All agencies are staffed with representatives of the various supporting arms. A FSC directs the operations of the FSCC. Once established, FSCCs coordinate directly with FSCCs of adjacent and higher units.

(1) MEB FSCC. The MEB commander task organizes the FSCC with the personnel, equipment, and communications required to support operational requirements. The MEB FSCC plans fires to support deep operations, participates in planning joint deep operations, and coordinates those operations with GCE close operations through the GCE FSCC. The GCE FSCC identifies and submits additional fire support requirements in the form of targets and requests for reinforcing fires to the MEB FSCC. The MEB FSCC receives the GCE's target nominations and coordinates the GCE's requests for fire support from external agencies (e.g., coordinating Army MLRS mission support for the GCE). The MEB FSCC also coordinates ACE and CSSE fire support requirements, including SEAD and fire support for rear operations respectively.

(2) GCE FSCC. The GCE FSCC plans fires, conducts targeting, and integrates deep supporting fires with maneuver. Close supporting fires require detailed integration and coordination and are primarily the concern of lower echelons. To enable the efficient employment and coordination of Marine aviation with ground operations, the direct air support center (DASC) is typically collocated, either physically or electronically, with the GCE's senior FSCC. If the DASC/FSCC collocation is not possible, the DASC may establish an air support liaison team (ASLT) at the FSCC to facilitate coordination. The tactical linkage between the GCE and ACE is maintained through the Tactical Air Control Party (TACPs) organic to GCE units. The GCE directly interfaces with other elements of the MEB as required.

b. MEB Fire Support Assets.

(1) Artillery. The MEB normally deploys with a supporting artillery battalion comprised of a headquarters battery, three to five six-gun M198 howitzer batteries, and attached meteorological and radar support. The headquarters battery includes the battalion headquarters and the administrative and logistical elements required to support battalion operations. Figure V-4 depicts a notional MEB artillery battalion.

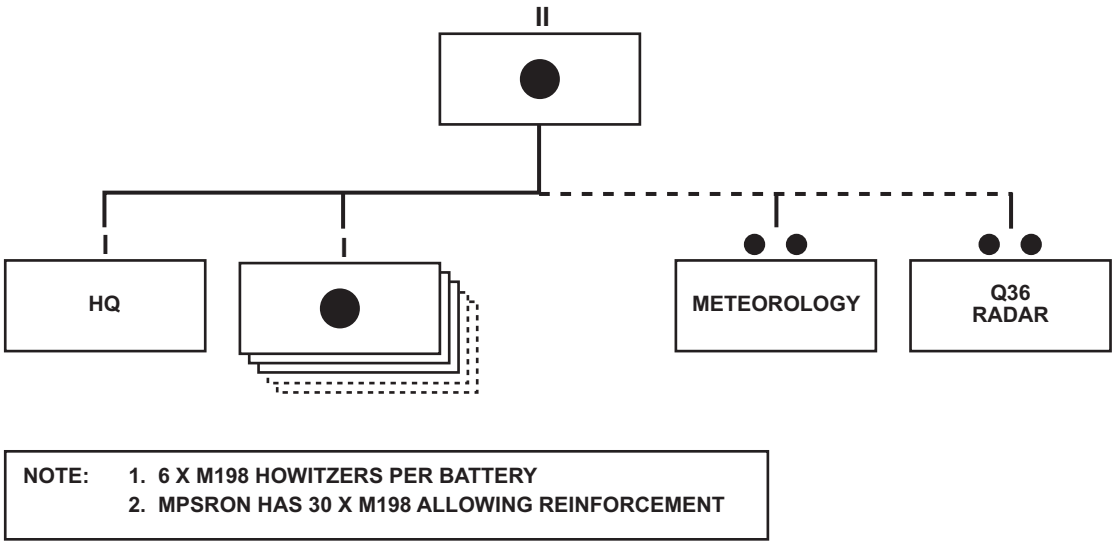

Figure V-4. Notional MEB Artillery Battalion

(2) Mortars. Each of the MEB's three rifle battalions (and the LAR battalion) has eight 81mm mortars in its weapons company. There are three 60mm mortars in the weapons platoon of each rifle company.

c. Naval Surface Fire Support. When naval fire support is available and the general tactical situation permits its use, naval firepower can provide large volumes of devastating, immediately available, and responsive fire support to combat forces operating near coastal waters. Naval gunfire (NGF) ships may be assigned one of two missions: DS or GS.

(1) DS. DS makes ship fires responsive to the needs of a battalion or regiment size ground force. Destroyers equipped with 5-inch guns usually execute this mission. A ship assigned a DS mission delivers planned and on-call (targets of opportunity) fires in support of the ground force. A supporting arms observer, a member of a shore fire control party (SFCP) organic to Marine units, requests and adjusts on-call fires.

(2) GS. Aerial observers or designated battalion spotters generally request and control the fires of GS ships. GS ships also execute planned fires IAW schedules of fires.

d. Marine Aviation. Marine aviation, operating as part of the concerted air-ground effort, provides the MEB a significant capability to destroy, deceive, or disrupt the enemy. The MEB uses the Marine Air Command and Control System (MACCS) to control aircraft and missiles. The MEB FSCC is linked to the ACE MACCS through the TACC. Paramount to the employment of the MACCS is the requirement for the MEB FSCC to have connectivity with the ACE TACC and the GCE FSCCs to be collocated or electronically connected with a MACCS agency. Such connectivity promotes the integration of MEB air and ground assets into a combined arms effort. Figure V-5 depicts MACCS/FSCC relationships.

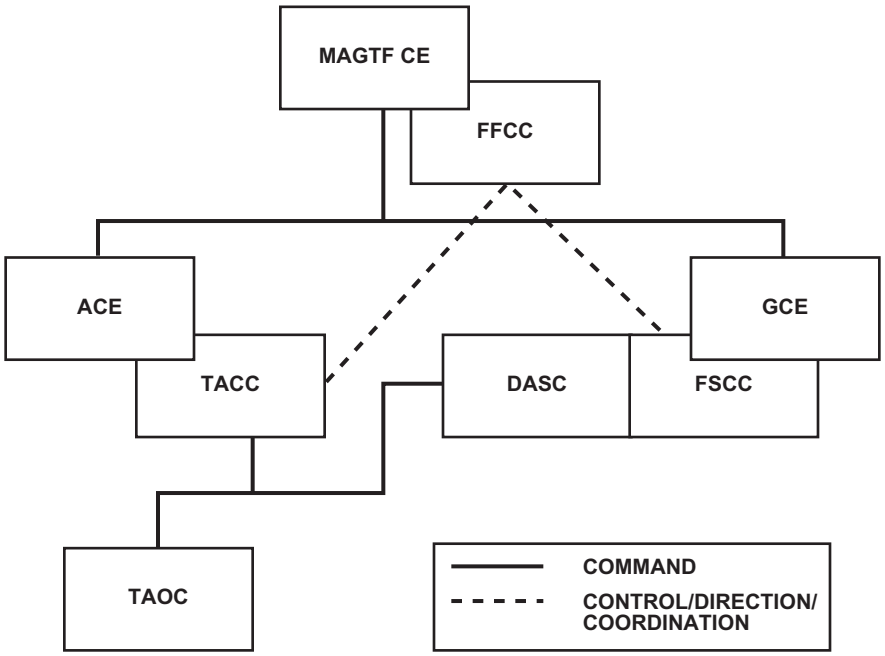

Figure V-5. Marine Air Command and Control System (MACCS)/Force Fires Coordination Center (FFCC) /Fire Support Coordination Center (FSCC) Relationships

e. MEB Target Collection Assets. The MEB CE determines and coordinates the employment of information and intelligence collection assets such as reconnaissance assets, UAVs, and other target acquisition assets within the MEB. Table V-3 defines MEB target acquisition assets.

Table V-3. MEB Target Acquisition Assets

CE	GCE	ACE
UAVs Deep reconnaissance units SIGINT Photographic and satellite sources HUMINT Adjacent units External sources	FOs FACs NGF spotters Ground intelligence sensors Weapons locating radar Combat troops Reconnaissance units	Forward air controller (airborne) (FAC(A)) Aerial Observers Other aircraft (including reconnaissance and EW)

6. Integrated Fire Support Operations

a. Task Organizing Artillery Assets. Successful fire support planning and execution in part hinges on the JFC's ability to task organize available fire support assets. The following paragraphs highlight the fundamentals of organizing fire

support assets for combat, describe the process of artillery organization for combat, and define the seven inherent responsibilities in executing artillery tactical missions.

(1) Fire Support Fundamentals—

(a) Provide adequate fire support to committed maneuver units.

(b) Weight the main effort.

(c) Provide the commander with immediately available fire support.

(d) Retain maximum feasible centralized control.

(e) Provide fire support for future operations.

(2) Artillery Organization for Combat. Artillery organization for combat consists of the two-step process of establishing command relationships and assigning tactical missions.

(a) *Step 1*. The appropriate commander establishes a command relationship for supporting artillery units of either attached, OPCON, or TACON.

(b) *Step 2*. On the recommendation from the FSC, the maneuver commander assigns tactical missions of DS, reinforcing, general support reinforcing (GSR), or GS to artillery units.

• DS. DS is the most decentralized tactical mission wherein an artillery unit provides close and continuous fire support to a specific maneuver unit.

• Reinforcing (R). An artillery unit with a reinforcing mission augments the fires of another artillery unit with a DS mission. This mission weights an effort and provides additional responsive fires to the supported maneuver commander. An artillery unit can reinforce only one other artillery unit at a time.

• GSR. An artillery unit with a GSR mission furnishes fires for the entire force within its range and reinforces the fires of another artillery unit as a second priority.

• GS. GS, the most centralized mission, retains artillery to support the force as a whole and provides the commander with immediately available firepower to influence the battle.

(3) Inherent Responsibilities. Table V-4 describes the seven inherent responsibilities of field artillery tactical missions that guide the planning and operational employment of artillery assets during integrated operations.

Table V-4. Inherent Responsibilities of Artillery Standard Tactical Missions				
An Artillery Unit With A Mission Of—	**Direct Support**	**Reinforcing**	**General Support Reinforcing**	**General Support**
Answers calls for HQ fire in priority from—	1. Supported unit 2. Own observers 3. Includes all target target acquisitions means not deployed with supported unit (e.g. radar, aerial observers) 4. Force artillery HQ	1. Reinforced artillery 2. Own observers unit 3. Force artillery HQ	1. Force artillery HQ 2. Reinforced 3. Own observers	1. Force artillery 2. Own observers
Has as its zone of fire—	Zone of action of supported unit	Zone of reinforced artillery	Zone of action of supported unit the include zone of fire of reinforced artillery unit	Zone of action of supported unit
Furnishes FOs/ FISTs and fire support sections (*FSSs) to USA .	Maneuver companies of supported unit. Provides temporary replacements for casualties	No requirement	No requirement	No requirement
Establishes liaison with—	Supported unit (to Bn level)	To reinforced artillery unit HQ	To reinforced artillery unit HQ	No requirement
Establishes communications with—	FSOs/FSCs and supported maneuver unit HQ	Reinforced artillery unit HQ	Reinforced artillery unit HQ	No requirement
Is positioned by—	DS artillery unit commander or as ordered by force artillery HQ	Reinforced artillery unit or as ordered by force artillery HQ	Force artillery HQ or reinforced artillery unit if approved by force artillery HQ	Force artillery HQ
Has its fires planned by—	Develops own fire plan	Reinforced artillery unit HQ	Force artillery HQ	Force artillery HQ

* An FSS for each maneuver brigade/battalion and FIST for each maneuver company are trained and deployed by the FA unit. The FIST for the mechanized infantry consists of an FIST headquarters and three forward observer parties per company. The FIST for the armor company consists of an FIST headquarters only. Once deployed, FISTs and FSSs remain with the supported maneuver unit throughout the conflict.

b. Characteristics of MEB and Notional Army Brigade Artillery. Table V-5 provides commanders and staffs with a ready reference that delineates the characteristics of artillery weapons systems available to the MEB and notional army brigade.

Table V-5. Characteristics of MEB and Notional Army Brigade Artillery

Unit	Weapon	# Weapons	Range (M)	Ammo Types	Fuses
MEB	M198 155mm Towed Howitzer	18-30/BN (6/Battery)	22,400* 30,000 (RAP)	HE, RAP, ILL, ICM, DPICM, ADAM, RAAM, High Concentrate (HC),WP, COPPERHEAD	CP, PD, VT, MTSQ, MT
Notional Army Brigade	M109A3 155mm SP Howitzer	18/BN (6/Battery)	18,100* 23,500 (RAP)	HE, RAP, ILLUM, ICM, DPICM, ADAM, RAAM, HC, WP, COPPERHEAD	CP, PD, MT, MTSQ, VT
Notional Army Brigade	M109A6 155mm SP Howitzer (Paladin)	18/BN (6/Battery)	24,000* 30,000 (RAP)	HE, RAP, ILLUM, ICM, DPICM, ADAM, RAAM, HC, WP, COPPERHEAD	CP, PD, MT, MTSQ, VT
Notional Army Brigade	MLRS	18/BN (6/Battery)	32,000	DPICM (M77)	Electronic Time
Notional Army Brigade	ATACMS	(Same as	165 km above)	APAM (M74)	Electronic Time

* The ranges are for HE with M203 propellant. Maximum ranges differ by propellants used.

c. Counterfire Operations. Given the vulnerability of our forces—particularly our combat and CSS units—to enemy artillery, commanders and staffs must devote special attention to providing effective counterfire against artillery. Unless augmented by army MLRS and Q-37 systems, the MEB will rely on organic weapons systems to provide counterfire against enemy indirect fire; the Q-36 radar, M198 howitzers, and attack fixed-winged and rotary-wing aviation. The most effective counterfire system will often be the MLRS. To maximize the capabilities of the MLRS battery, direct "*sensor-to-shooter*" linkage may be established from specific sensors to the MLRS battery. Linking the battery with a Q-36 or (preferably) a Q-37 provides the commander with a responsive counterfire capability to locate and attack firing enemy indirect fire systems. When the MEB must rely on Marine aviation for long-range counterfire, "*sensor-to-shooter*" linkage can be established with a quick-fire channel connecting an air officer in the target processing center directly to a FAC(A). A proactive counterfire strategy links sensors (such as a USMC UAV) with the MLRS or other attack means in order to locate, attack, and eliminate enemy artillery before it enters the fight.

d. MLRS Support of USMC Operations. MLRS units provide a significantly enhanced indirect fire capability to conduct counterfire operations. The discussion below addresses C2 of MLRS units under MEF control, describes required communications linkages, and highlights planning considerations for MLRS employment.

(1) C2. When operating under USMC control, MLRS units should be placed within the artillery organization and should be tasked to support the MEF as a whole. The senior artillery headquarters assigns the MLRS unit GS, GSR missions, or nonstandard missions.

(2) Communications. The MLRS unit operates on the following artillery nets when supporting USMC operations:

(a) Regimental Command Net (HF).

(b) Regimental Tactical Net (VHF).

(c) Regimental Fire Direction Net (VHF).

(d) Radar Telling Net (VHF), as required.

(e) Regimental Survey/Met Net (VHF), as required.

(f) Regimental Communication Coordination Net (HF/VHF).

(3) Employment Considerations. The employment of the MLRS unit will be similar to the employment of a Marine artillery battalion with a GS mission. MLRS operations are characterized by rapid emplacement, engagement, and displacement of widely dispersed launchers. Specific planning considerations include:

(a) Sustained Operations/Launcher Response Time. Schedules of fire must be coordinated so the battery can manage launcher posture and/or response time. Because of maintenance, personnel, and other factors, the "*rule of thumb*" is to plan fires for no more than four launchers at one time. If a surge condition arises, the unit can be tasked to provide a higher number. If all available launchers fire on a schedule, temporary loss of the asset (20 to 45 minutes) can be expected while the launchers move to reload points, reload, and return to firing points.

(b) Launcher Response Posture. On the basis of METT-T/METT-TC, the force commander's guidance, ammunition resupply, and launcher maintenance status, the commander determines how unit launchers are postured. A launcher response posture is its readiness to respond to fire missions. The terms *hot, cool,* and *cold* indicate launcher response posture.

• *Hot* status indicates the launcher is fully capable of firing. Status is based on the launcher's electrical and mechanical systems, not on its location or ammunition load.

• *Cool* status indicates a launcher is capable of firing but only after a warm-up period of about eight minutes.

• *Cold* status indicates the launcher is not mission-capable for maintenance reasons or that one or more essential systems are shut down for maintenance, preventive maintenance checks and services (PMCS), crew rest, and so forth. If a *cold* launcher is mission-capable, it may take 30 minutes or more for it to respond.

(c) Tactical Posturing. The battery directs the platoons to maintain a specific number of launchers in a *hot* status. This is based on guidance from the controlling FA headquarters, METT-T/METT-TC, total launchers available, ammunition available, crew rest, and fatigue. The platoons usually rotate their launchers through *hot* status, changing individual launchers and maintaining the total number of required *hot* launchers.

(d) Fire Planning. The MLRS uses two basic types of fire missions in support of close operations: planned (scheduled) and targets of opportunity (unscheduled). Given the different platoon positions described above, at least 30 minutes may be required for the entire MLRS battery to execute a fire plan. In scheduling MLRS fires, each launcher is given a separate line on the scheduling worksheet.

(e) Positioning. MLRS fights as close to the FLOT as possible in order to maximize its 32 km range and offset the range advantage enjoyed by some enemy indirect fire systems. METT-T/METT-TC availability of ground maneuver units to protect MLRS, the scheme of maneuver, and a degree of risk acceptable to the commander dictate employment and positioning decisions.

(f) Increased Target Processing Requirements. Because of the additional target production from radars accompanying attached MLRS, the Marine target processing center may require augmentation by target processing sections to efficiently process targets.

(g) Ammunition Expenditure. MLRS ammunition consumption requires intense management by planners, operations personnel, and logisticians. Requirements for current and projected operations are balanced against the controlled supply rate; MLRS support and appropriate controls are established accordingly. The *missile profile*, the measure of effort expected of a system under various levels of combat intensity, provides one methodology for determining the anticipated consumption rates for MLRS units. (See Table V-6.) These levels of intensity are described below.

Table V-6. MLRS Ammunition Planning Figures		
Level	**# Rockets/Launcher/Day**	**# Missiles/Battery/Day**
Sustained	3-130	2-16
Surge	130-175	15-17
Peak	175-263	17-20

Note: Remember, these are the capabilities of the weapons systems, but not the controlled supply rate (CSR) from the operations order; the CSR actually indicates how much ammunition the user can expect to use for a particular evolution.

• Sustained level of effort expended per day over an extended period of combat for a committed force; this level is normally expected to occur 75 percent of the time for MLRS units.

• Surge level of effort required when a committed force faces a main attack; this level is expected to occur less than 20 percent of the time for MLRS units.

• Peak level of effort during an intense period of combat. DS and/or reinforcing artillery within a selected brigade area are likely candidates; this level is expected less than five percent of the time for MLRS units.

(h) Maintenance Support. MLRS units attached to the MEF must deploy with the appropriate automotive and missile maintenance personnel, equipment, and repair parts required to conduct sustained combat operations. The MEF possesses no capability to support specialized MLRS equipment.

(i) Troop Safety. Troop safety considerations normally preclude employment of MLRS in proximity to friendly personnel. Danger close for MLRS M26 rockets is two km at maximum range. For planning purposes, MLRS fires are generally directed no closer than two km beyond the FLOT. The potential for unexploded ordnance (UXO) in areas where large volumes of MLRS fires have occurred must be considered from both troop safety and maneuver/movement standpoints during operational planning and execution.

e. Close Air Support (CAS) Operations.

(1) CAS for the Notional Army Brigade When Deployed With the MEF. Army forces normally receive CAS from the Air Force and are provided with Air Force liaison parties that request, coordinate, and control available CAS.

(2) CAS for the MEB When Deployed With a Corps. The MEB possesses CAS-capable aircraft and the means to coordinate and control those aircraft. Except in exceptional circumstances, Marine aviation remains under the control of the MEB commander. Chapter VII addresses procedures for requesting air support when the MEB requires support that exceeds the capability of the MEB ACE.

f. Naval Surface Fire Support (NSFS) of the Notional Army Brigade.

(1) Procedures During Amphibious Assaults. During amphibious phases of a joint operation, a naval task force provides interface with the notional army brigade FSE through the ship-based supporting arms coordination center (SACC). The SACC is responsible for coordinating all fires during the assault. To facilitate the coordination of fires in support of the landing force assault to shore, the SACC augments with personnel and equipment from the MEF FFCC and the senior GCE FSCC. Normal coordination is through the Artillery Command Fire (CF) or Fire Direction (FD) Nets. The Landing Force Fire Support Coordination Net (HF) can serve as a backup. To minimize dependence on ship-to-shore communications and because higher echelons may not be ashore, units conduct lateral coordination when fires clearance must be obtained from only one other landing force unit. When ashore and prepared, the FFCC assumes responsibility for fire support coordination from the SACC. The change in responsibility depends on which agency possesses the best capability to coordinate and is contingent on the commander, amphibious task force decision.

(2) Procedures Ashore. The notional army brigade maintains communications on the NGF Support and/or NGF Control Net (HF) and the Brigade Command I and II Nets (VHF). These nets provide communications for the planning and coordination of NSFS between the NSGS ships, the GCE FSCC, and the battalion landing team (BLT)/notional army brigade. These nets support day-to-day planning among these agencies.

(3) The Army is addressing the HF radio requirements that Army forces need to communicate with NGF ships. If the Army unit has or is augmented with HF radios, request for naval surface fire support will be from:

(a) FIST direct to ship, if FIST has HF.

(b) FIST to battalion FSE to ship if only battalion has HF.

(c) FIST to battalion FSE to notional army brigade FSE to ship, if only notional army brigade has HF.

If the Army does not have HF radios, the request will go FIST via FM to battalion FSE via FM to notional army brigade FSE via FM to MEF FFCC to ship via HF.

(4) The NGF communications interface includes a designated NGF ground spot net with a frequency of 2-30 MHz HF. Compatible communications equipment includes: USMC—PRC-104, GRC-193, MRC-138; USA—GRC-106, GRC-193, and SINCGARS family of radios; USAF—PRC-104, MRC-107/108, GRC-206.

g. Artillery Communications. The discussion below defines the external operating nets for the artillery battalions supporting the MEB when operating with a corps and for the notional army brigade when operating with a MEF respectively:

(1) Notional Army Brigade under MEF Control. Table V-7 identifies the external nets the notional army brigade's supporting artillery battalion must operate in when the notional army brigade fights as part of a MEF (assuming a Marine artillery regimental headquarters is present). The table presumes the Army artillery battalion will only perform a tactical mission of DS for the notional army brigade. However, there may be occasions (e.g., when the notional army brigade is assigned a reserve mission) when the assignment of reinforcing, GSR, or GS missions may be appropriate.

Table V-7. Notional Army Brigade Artillery External Communications Net Structure When Operating with MEF

External Nets	DS Notional Army Brigade	R	GSR	GS
Artillery Regimental Command Net (HF)	X	A	X	X
Artillery Regimental Tactical Net (VHF)	X	X	X	X
Artillery Regimental Fire Direction Net (VHF)	X	X	X	X
Radar Telling Net (VHF)	A	A	X	X
Regimental Survey/Met Net (VHF)	X[2]	X[1,2]	X[1,2]	X[2]
Regimental Communication Coordination Net (HF/VHF)	A	A	A	A
Reinforced Artillery Battalion Fire Direction Net (VHF)		X	X	
MAGTF/Landing Force Artillery Command/ Fire Direction (VHF)	A	A	A	A
Artillery Conduct of Fire Net (HF)	A	A	A	A
Maneuver Unit Operations/Intelligence (VHF)	X	X		

[1] Reinforced Unit Survey Net
[2] Primary External Net

X=Subscriber
A=As required

(2) MEB Under Corps Control. Table V-8 identifies the external nets that the MEB's supporting M198 artillery battalion must operate in when the MEB fights as part of a corps. The table assumes the artillery battalion performs a tactical mission of DS for the MEB's GCE. However, there may be occasions (e.g., when the MEB is assigned a reserve mission) when the assignment of reinforcing, GSR, or GS missions may be appropriate.

Table V-8. MEB Artillery External Communications Net Structure When Operating with Corps

External Nets	DS GCE	R	GSR	GS
Force FA Command (VHF)(V)	X		X	X
Force FA Operation/Fire 1, 2, 3 (VHF)(V or D)	X	X	X	X
Force FA Command Fire (HF-SSB)(V/FAX)	X	X	X	
Force FA Target Acquisition/Intelligence (VHF)(V)				X
Force FA Survey (VHF)(V)	X[2]	X[1,2]	X[1,2]	X[2]
Force FA Administrative/Logistics (VHF)(V)				A
Maneuver Unit Operations	X	X		
Maneuver Unit Fire Support (VHF)(V)	Internal	X[2]	X[2]	A
Reinforced Battalion Command (VHF)(V)		X	X	
Reinforced Battalion Operations/Fire (VHF)(V or D)		X	X	

[1] Reinforced Unit Survey Net X=Subscriber V=Voice Net

[2] Primary External A= As Required D=Digital Net

Chapter VI

ENGINEER OPERATIONS

1. Background

To succeed on a dynamic battlefield, commanders must ensure their forces have the ability to maneuver freely and be able to maximize the effects of its fires. At the same time, the force must deny the enemy that capacity. Engineers provide commanders with significant capabilities to assist in multiplying the effectiveness of both maneuver and fires.

2. Terminology

USMC doctrine recognizes four primary combat engineer functions: *mobility*, *countermobility*, *survivability*, and *general engineering*. The Army considers *topographic engineering* to be a fifth primary engineering function that supports the Defense Mapping Agency as well as all the services. The source documents for the definitions include JP 1-02 and MCWP 3-17.

3. Notional Army Brigade Operations

a. Notional Army Brigade C2. The notional army brigade normally deploys with an attached engineer battalion. The mission of the battalion is to increase the combat effectiveness of the notional army brigade by performing mobility, survivability, and limited general engineering tasks. Based on METT-T/METT-TC analysis, additional engineer units can be requested from division, corps, and EAC to increase these engineer capabilities. The brigade engineer coordinates the efforts of all engineers working in the notional army brigade sector. The engineer battalion commander also dual hats as the brigade engineer. The assistant brigade engineer serves as the commander's full-time representative on the notional army brigade staff at the TOC. Engineers advise the notional army brigade and subordinate commanders and staffs on engineer unit capabilities and employment and on engineering impacts regarding respective unit plans and operations. Engineers also plan, coordinate, and supervise staff activities of assigned, attached, and supporting engineer units. The engineer battalion also provides a battalion TF C2 element for specific combat operations and can reorganize and fight as infantry when augmented with fire control elements. The battalion is most effective, however, when employed to perform engineering tasks.

b. Organization. The notional army brigade engineer battalion consists of a HHC and three engineer companies (see Figure VI-1). The notional army brigade commander normally task organizes forces with a supporting engineer company. However, METT-T/METT-TC may dictate that one or more companies be retained in general support of the brigade or placed in support of a particular task force to weight the notional army brigade main effort. Table VI-1 provides a recapitulation of organic notional army brigade engineer battalion equipment.

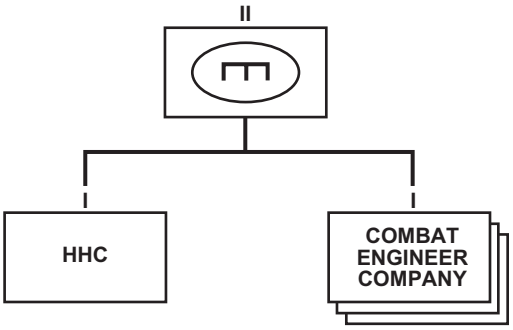

Figure VI-1. Notional Army Brigade Engineer Battalion

Table VI-1. Notional Army Brigade Engineer Battalion Equipment

Type Equipment	#	Type Equipment	#
M577 CP	6	Cargo (HEMTT)	8
Small equipment excavator (SEE)	6	Fueler (HEMTT)	4
AVLB	12	5-ton dropside cargo truck	3
Armored combat earth mover	21	2.5-ton cargo truck	11
Armored personnel carriers (M113 APCs)	28	1.5-ton trailer	26
Combat engineer vehicles (CEVs)	6	Maintenance contact Truck	3
Ammunition carriers (M548)	6	Wrecker, HEMTT	1
Mine clearing line charge (MCLC)*	12	Shop equipment light truck	1
Volcano*	6	HMMWV	27
Vehicle, tracked recovery (M88 heavy)	2	Mobile kitchen trailer Water trailer	2 4
Chemical agent alarm	18	Reconnaissance boat	7
Decontamination apparatus	1	Demolition set	24
Mine detectors	60	M60-series launcher	12
Radio sets AN/GRC/VRC/PRC 46/47/49/64/77/160	108	Radio set AN/GRC 106	1
Chainsaw	30	Carpenters tool kit (platoon and squad)	24

***Note: These are actually ordered as ammunition versus equipment so they may not come with the notional army brigade unless they are ordered.**

4. MEB Engineer Operations

a. MEB C2. A MEB may have as many as four separate engineer units as shown in Figure VI-2. All of these units provide mobility, countermobility, survivability, and general engineering support based on size and capabilities. MAGTF engineer units' organization and equipment allow performance of a variety of missions and tasks in any environment. Engineer units of the MEB are staffed, structured, and

equipped to perform engineer assignments appropriate to their anticipated employment. The capabilities of given engineer units are largely dependent on the type and quantity of equipment they possess.

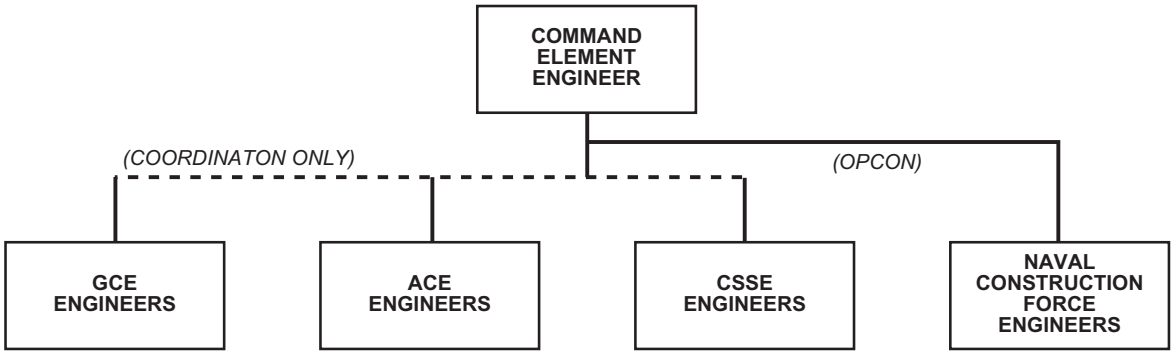

Figure VI-2. Notional MEB Engineers

b. CE Engineer. The MEB CE has an engineer officer on the staff. The engineer officer's duties are to advise and inform the MEB commander regarding the capabilities and best use of various engineer units within the MEB. The engineer officer also coordinates engineer support with units external to the MEB. The engineer officer provides CE level support, guidance, and coordination. A unit's normal capability is enhanced by tasking additional (or various) engineer units for reinforcement.

c. GCE Engineers. Combat engineers organic to the GCE provide close combat engineer support by performing mobility, countermobility, and limited survivability tasks. They are integrated into combat formations and provided amphibious assault vehicle support or light armored vehicle transport to make them as survivable and mobile as the forces they are supporting. Combat engineers have the secondary mission to fight as infantry.

(1) GCE Engineer Organization. Normally, a reinforced company from the combat engineer battalion (CEB) of the Marine division supports a MEB GCE as depicted in Figure VI-3. The engineer company commander also dual hats as the GCE engineer and advises the GCE and subordinate commanders on engineer unit capabilities, employment, and operational impacts and plans. The engineer company commander also coordinates activities of attached and supporting engineer units.

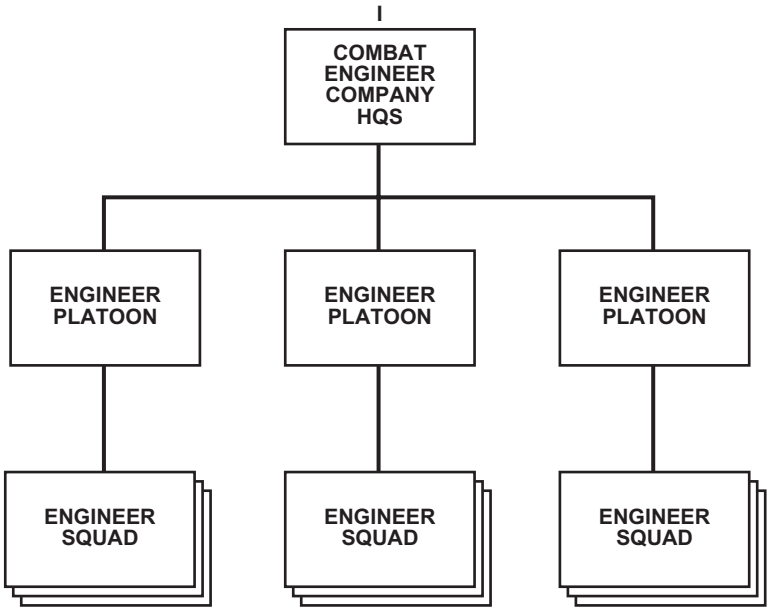

Figure VI-3. MEB Ground Combat Element (GCE) Combat Engineer Company

(2) Equipment. Table VI-2 details some of the equipment assigned to an engineer company that supports a MEB GCE.

Table VI-2. Notional Combat Engineer Company (Reinforced) Equipment in Support of a MEB GCE

Nomenclature	Qty	Nomenclature	Qty
AN/GRC 160	1	Chainsaw	9
AN/PRC 119	15	Carpenter kit	3
2 1/2 yd general purpose bucket	2	Pioneer kit	9
250 CFM	1	Armored combat excavator	2
Conventional mine laying system	4	T-5 bulldozer	2
Decontamination apparatus	1	D7G bulldozer	2
Demolition kit	9	SEE tractor	3
Mine detector	9	TRAM	2
10k forklift	2	M923 5-ton truck	3
Line change/trailer	9	M929 5-ton dump truck	3
Mine field marking system	1	M998 HMMWV	12

d. ACE Engineers. Two assigned Marine wing support squadrons (MWSSs) support the ACE of a MEB. One MWSS normally supports the fixed-wing components of the ACE, while the other MWSS provides support to the rotary-wing component.

(1) MWSS Organization. The engineer operations division of the MWSS provides the engineer capability (minus bulk fuel support) to the ACE as shown in Figure VI-4.

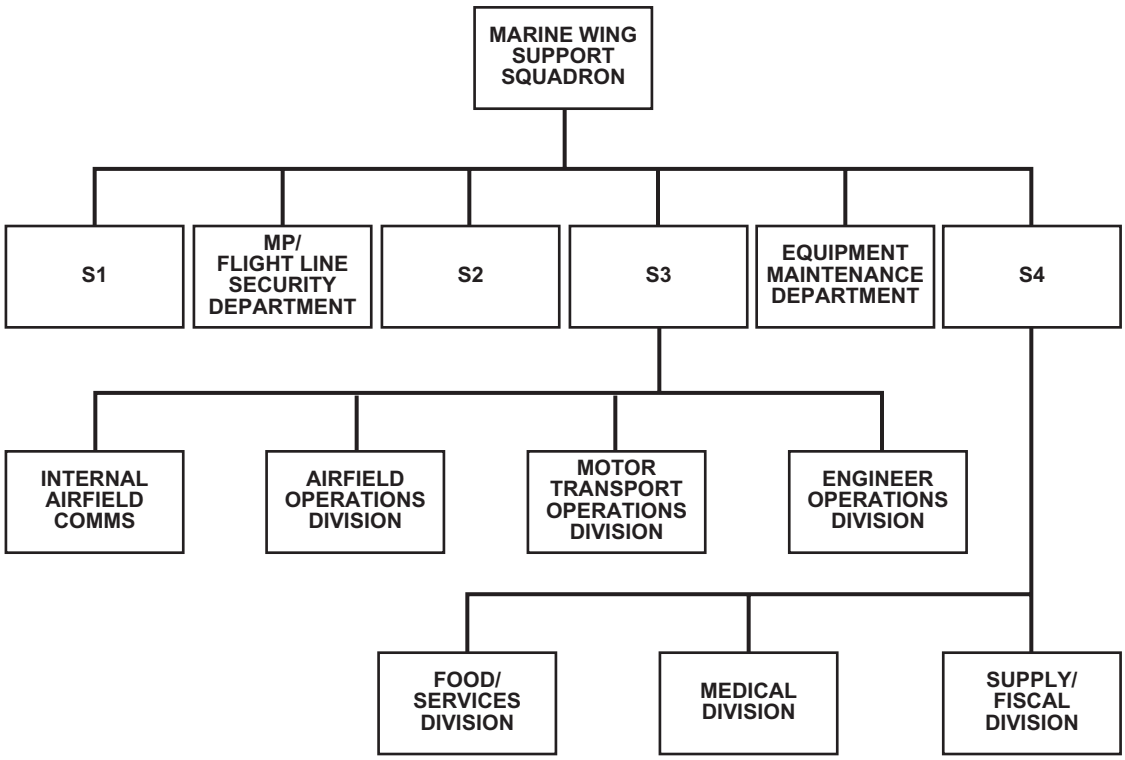

Figure VI-4. MEB Air Combat Element (ACE) Marine Wing Support Squadron

(2) MWSS Engineer Equipment. The table of equipment for the MWSS varies depending on which component of the ACE it supports. Engineers located in the airfield operations division receive, store, and dispense aviation and ground fuels. As directed, CSSE engineer assets may augment MWSS elements. Tasks include constructing vertical/short takeoff and landing sites, repairing, improving, and maintaining roads within the ACE tactical area of responsibility, shelter construction, and limited rapid runway repair. Table VI-3 provides a summary of some of the engineer equipment available to the fixed- and rotary-wing MWSSs.

Table VI-3. Marine Wing Support Squadron (MWSS) (Fixed-Wing) Engineer Equipment

Nomenclature	Qty	Nomenclature	Qty
Shower unit	5	Vibratory compactor roller	2
2 1/2 yd general purpose bucket	4	15 kw power distribution system	10
5 CFM compressor	2	30 kw power distribution system	4
50,000 lb container handler	2	100 kw power distribution system	2
250 CFM	2	Survey set	1
30-ton crane	2	3000 gal collapsible water tank	44
Drafting equipment set	1	T-5 bulldozer	2
Decontamination apparatus	2	D7G bulldozer	4
Chainsaw	5	Runway sweeper	2
Demo kit	1	MC 1150E tractor	2
Mine detector	2	644E tractor	9
Floodlight set	10	SEE tractor	2
Tactical airfield fuel dispensing system (TAFDS)	4	Forklift extendible boom	12
Road grader	2	4000 lb forklift	6
Helicopter Expedient Refueling System (HERS)	7	Reverse Osmosis Water Purification Unit (ROWPU)	9
Excavator	1	Medium freshwater purification unit (MFWPU) 3000 Limit (LMT)	2
Field laundry	4	Water chiller	5
Light set (large)	3	Welding machine	2
Light set (small)	2	Petroleum testing kit	6
10,000 lb forklift attachment	9	3 kw generator set	12
SIXCON pump fuel module	4	10 kw generator set	5
Fuel SIXCON	18	30 kw generator set	14
350 cu ft refrigerator	11	60 kw generator set	6
Refrigeration unit	11	100 kw generator set	4
100 cu ft refrigeration unit	10	D7G ripper attachment	2

Note: MWSS (Fixed-wing) has M-21 arresting gear, 6 vs 4 TAFDS, and 2 vs 7 HERS.

e. BSSG Engineers. BSSG engineers are a reinforced company from the engineer support battalion (ESB) of the FSSG. This company provides general engineering support to the MEB. The engineer company commander also dual hats as BSSG engineer. The engineer company commander advises the BSSG on engineer unit capabilities and employment and on engineering aspects of plans and operations. The engineer company commander also plans and coordinates the activities of attached and supporting engineer units. Figure VI-5 illustrates BSSG engineer organization. Table VI-4 recaps BSSG engineer equipment.

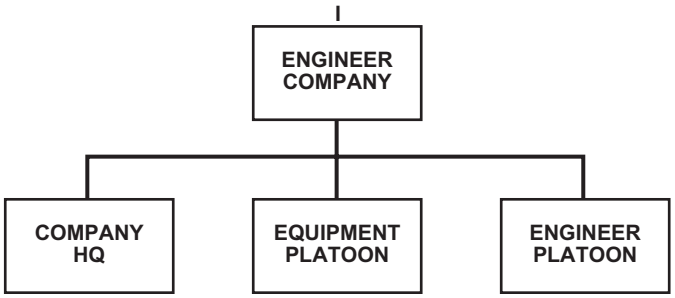

Figure VI-5. MEB Brigade Service Support Group (BSSG) Engineer Company

Table VI-4. Notional Engineer Company (Reinforced) Equipment in Support of a MEB BSSG

Nomenclature	Qty	Nomenclature	Qty
Shower unit	2	Assault trackway kit	10
2 1/2 yd general purpose bucket	3	D7G ripper attachment	1
250 CFM	1	Chainsaw	9
Drafting equipment set	1	T-5 bulldozer	2
Conventional mine laying system	4	3000 gal collapsible water tank	17
Decontamination apparatus	1	D7G bulldozer	2
Demolition kit	9	Water SIXCON	5
Mine detector	9	644E tractor	2
Floodlight set	2	SEE tractor	4
Armored combat earthmover	4	Carpenters kit	3
10,000 lb forklift attachment	2	Fuel SIXCON	3
3 kw generator set	15	Water purification set	2
10 kw generator set	2	Chainsaw	9
30 kw generator set	10	Forklift extendible boom	1
60 kw generator set	2	Water chiller	2
Line charge/trailer	9	Pioneer kit	1
Mine field marking system	1	ROWPU	2
Large light set	1	MFWPU 3000 LMT	2

f. Naval Mobile Construction Battalion (NMCB). A NMCB of the naval construction force (NCF) normally supports a MEB. The NMCB mission is to provide highly skilled construction support including construction of ammunition supply points; airbases; ports; petroleum, oils, and lubricants (POL) storage and distribution sites; and storage facilities. NMCB units are neither trained nor equipped for close combat engineer support tasks such as obstacle breaching.

5. Integrated Engineer Operations

Tables VI-5A through VI-5D compare the engineering capabilities of both notional army brigade and MEB engineers regarding the four common primary engineering functions of mobility, countermobility, survivability, and general engineering.

Table VI-5A. Mobility Tasks

Primary Engineer Function	Notional Army Brigade	MEB			
Mobility Tasks	ENGR Bn	GCE	CSSE	ACE	NCF
Tactical reconnaissance	X	X	X		
Breach obstacles	X	X	X		
Combat roads/trails	X	X	X	X	X
Assault bridging	X	X	X		
Follow-on bridge construction			X		X
HLZ/DZ preparation	X	X	X	X	X
Improve beaches			X		X
Rapid runway repair			X	X	X
UXO disposal (with EOD technician supervision)	X		X	X	

Table VI-5B. Countermobility Tasks					
Primary Engineer Function	**Notional Army Brigade**	**MEB**			
Countermobility Tasks	ENGR Bn	GCE	CSSE	ACE	NCF
Tactical reconnaissance	X	X	X		
Construct log posts/cribs	X	X	X		
Construct abates	X	X	X		
Wire obstacles	X	X	X	X	
Conventional mine emplacement	X	X	X		
Scatterable mine emplacement*	X				
Road/runway cratering	X	X	X	X	
Bridge demolition	X	X	X		
Construct antitank ditches	X	X	X		X
Note: * Must be ordered as ammunition.					

Table VI-5C. Survivability Tasks					
Primary Engineer Function	**Notional Army Brigade**	**MEB**			
Survivability Tasks	ENGR Bn	GCE	CSSE	ACE	NCF
Construct fighting positions	X	X	X	X	X
Construct bunkers/C2 nodes	X	X	X	X	X
Assist in deception operations	X	X	X	X	X

Table VI-5D. General Engineering Tasks					
Primary Engineer Function	**Notional Army Brigade**	**MEB**			
General Engineering Tasks	ENGR Bn	GCE	CSSE	ACE	NCF
Survey/drafting	X		X	X	X
Aircraft revetment	X		X	X	X
Bulk fuel			X	X	X
Water purification			X	X	
Field sanitation/hygiene	X		X	X	X
Tactical electric			X	X	X
Well drilling			X	X	X
Port repair					X
Forward operating base construction and maintenance			X	X	X
Mobile electric power			X	X	X
Expeditionary airfield construction				X	X

a. Planning Considerations. Coordinated engineer planning ensures that engineer combat resources support the scheme of maneuver, fire support plan, and CSS plan. Common planning also ensures equipment compatibility, maintenance, and supportability.

b. Considerations for Task-Organizing Engineers. Task organizing engineer units must take the following considerations into account:

(1) Maneuver units without engineer support normally receive engineer companies in support of a regiment or brigade.

(2) Support relationships are normally GS in the MEF rear and DS to committed maneuver units.

(3) The pertinent activities of engineers working in an area are coordinated by the brigade engineer regardless of the type of relationship.

(4) Engineer materials to support engineer operations are furnished by the supported unit.

(5) Administrative/logistical support is provided to the attached engineer unit.

(6) The supported unit furnishes engineer materials to support engineer operations, regardless of command/support relationships.

c. Liaison Requirements. Constant liaison and reliable communications are necessary for integrated engineer operations. Liaison personnel provide the following services:

(1) Advise supported commander of capabilities, limitations, employment, and status of supporting engineer units/assets.

(2) Exchange target lists/folders as required.

(3) Maintain/update status of obstacles and emplacement of conventional and scatterable minefields.

(4) Monitor/share intelligence on status of enemy units, capabilities, activities, including enemy obstacles.

(5) Plan specific arrangements for breached lane markings and handoff from forward breaching units to following engineers for lane improvement and obstacle clearing.

(6) Develop and implement a common lane marking system for breaching operations.

(7) Plan and coordinate engineer efforts for extensive obstacle emplacement well in advance of operations.

d. UXO. UXO affects planning and execution of combat operations. The type of munitions employed, self-destruct times, submunition density, terrain and climatic conditions, and the mission and degree of mobility required of the affected force must be viewed with respect to the forces that encounter them. JP 3-0 states "*Coordination of attacks beyond the fire support coordination line (FSCL) is especially critical to commanders of air, land, and special operations forces. Their forces may now be operating beyond a FSCL or may plan to maneuver on that territory in the future. Such coordination is also important when attacking forces are employing wide-area munitions or munitions with delayed effects*." Preventing undue constraints on movement of forces and maneuver elements in order to maintain the operational tempo requires planning and reporting. (**Note:** The ALSA publication, UXO, FM 100-38 and MCRP 4-5.1, further illuminates this topic)

(1) Planning. The use of submunitions primarily impacts land operations and requires close coordination between component commanders and the JFC before their use by any delivery means. Planning considerations include the following points:

(a) Preplanning, deconflicting, and coordinating with other components.

(b) Minimizing impacts of residual effects on friendly operations.

(c) UXO inhibits maneuver by potentially restricting use of terrain, increasing reconnaissance requirements, and reducing momentum (speed of maneuver, rates of march). UXO also inhibits night movement, increases risk to CS/CSS elements, ties up engineers or other forces clearing/marking lanes, and reduces available firepower because of increased loss of personnel and equipment. Consider:

• Future use of current enemy controlled terrain including airfields/ airstrips.

• Dismounted operations required in the area (special operations forces, security operations, etc.). UXO is a significant obstacle to dismounted forces as they face the greatest danger of death or injury.

• A mechanized crew can reduce their risk from crossing UXO hazard areas by remaining mounted.

• Personnel manning and being transported by wheeled vehicles face nearly the same risk to UXO as dismounted forces.

• Aircraft in defilade, flying nap-of-the-earth, or in ground effect (below 45 feet) are vulnerable to UXO. United States (US) and foreign munitions incorporate sensitive fuzing that can react to aircraft in ground effect

• UXO has the potential to significantly damage certain types of landing craft and in some cases, result in casualties of embarked personnel.

• Availability of engineer/explosive ordnance disposal (EOD) support.

(d) In regard to impact on terrain management, task organizing engineers must consider the following items:

• Will friendly troops transit/occupy the area?

• Locations of proposed main supply route(s).

• Restricted areas—proposed logistics base sites.

(e) Communications requirements: Information requirements and availability of automation and communications equipment to rapidly disseminate information.

(2) Reporting. Just as units emplacing obstacles and minefields are responsible for immediate reporting of those obstacles and minefields, units are also responsible for reporting UXO and UXO hazard areas created through use of submunition ordnance. See Appendix C for UXO Spot Report format. Once reported, UXO hazard areas are treated as another minefield or obstacle. As such, UXO information requires processing, plotting, and disseminating to higher, lower, and adjacent units.

Chapter VII

AVIATION

1. Background

The Army views its attack and cavalry aviation assets as a maneuver element. The Marines also view aviation as a potential maneuver element; however, they primarily employ it as a supporting arm that assists in accomplishing MAGTF objectives. This chapter familiarizes commanders and staffs with the missions, capabilities, limitations, command and control, and planning factors for employment of respective service aviation organizations. Although the text discusses notional aviation organizations, there are no *"fixed"* aviation units assigned to or supporting either the notional army brigade or MEB. Operational requirements and METT-T/ METT-TC considerations drive the specific composition of aviation elements that may deploy with AMCI forces.

2. Army Aviation Overview

a. Army Concept of Aviation. Aviation, as a maneuver force, is the third dimension element of Army operations. Aviation organizations feature manned systems, operating as units, employed as air combined arms' teams that use terrain in the same fashion as ground units. Although they offer some unique advantages to the commander, such as the ability to fight over and within swamps, forests, and mountains, they are subject to the same battlefield dynamics and the same physics of land warfare as ground combat units.

b. Notional Army Brigade Augmentation. Aviation forces deployed with the notional army brigade are task organized based on METT-T/METT-TC. Most likely, an aviation task force (Marines would use "aviation element") would include attack and/or scout helicopters, as well as assault and aeromedical helicopter support. (See Table VII-1.) Aviation forces could also include special electronic mission aircraft (SEMA) for electronic warfare operations.

Table VII-1 *Possible* Army Aviation Task Force		
Type Unit	**#/Type of Aircraft**	**Personnel**
Attack Battalion	24 AH-64A/D ***or*** 24 OH-58D	350
Air Cavalry Troop	8 OH-58D	40
Assault Company	8 UH-60 A/L	45
Medium Lift Platoon	8 CH-47D	50
Aeromedical Evacuation (2 sections)	6 UH-60 A/L	33
Aviation Intermediate Maintenance Company (-) (AVIM)		40
An Aviation Task Force Commander will ensure effective utilization of these assets using task organization based on the higher commander's intent and METT-T/METT-TC.		

(1) Aircraft. Each aviation unit brings unique capabilities. AH-64A/D attack aircraft are excellent night reconnaissance, security, and attack aircraft. The AH-64 laser designator/laser spot tracker is compatible with other laser capable aircraft, ground laser identifiers (GLID), and laser guided munitions. The OH-58D also has excellent night capabilities and has the ability to integrate fixed-wing support into Army fire support operations through its communications and laser designation capabilities. The pilots are trained for integrated fixed-wing support into Army CAS operations through its communications and laser designation capabilities. Both the OH-58D and AH-64A/D can designate for artillery (Copperhead) and attack aircraft (laser guided munitions). The UH-60 provides lift support for air assault operations, air movement of troops, C2, CS, and CSS (movement of equipment and supplies). If deployed, the EH-60A, a divisional SEMA system, is capable of intercepting, direction finding, and jamming enemy communications systems. The CH-47D provides a medium-lift capability to AMCI forces for movement of troops, supplies, and equipment.

(2) Aeromedical Evacuation. Two air ambulance sections may deploy with the brigade. The aeromedical evacuation sections consist of six UH-60A/L helicopters and 33 personnel (including maintenance support). Appropriate aviation unit maintenance (AVUM) and aviation intermediate maintenance (AVIM) support deploy with the section. The aircraft in these sections provides aeromedical evacuation from the maneuver units to the FSB medical company/forward surgical team location, forward service support group hospital, or amphibious ready group ships. The aeromedical evacuation sections often collocate with the aviation element (the Army usually uses "aviation task forces") for maintenance, logistical support, and security. These aeromedical sections do not have organic forward arming and refueling point (FARP) capability. They must depend on other aviation units for support.

c. Missions. The flexibility of Army aviation allows for its employment throughout the battlefield. During close, deep, and rear operations, force commanders can use aviation to mass superior combat power against the enemy's detected vulnerabilities and projected weaknesses. Aviation forces and assets for close, deep, and rear operations are assigned missions according to the force commander's intent, operational or tactical objectives, and priority mission support requirements. Table VII-2 shows the various mission capabilities of Army aviation.

Table VII-2. Army Aviation Missions

Deep	Close	Rear
Attack Reconnaissance Security Advanced guard* Covering force** Air Assault C2	Attack Reconnaissance Security (screen) Air Assault C2 Reserve	Attack Reconnaissance Air Assault Tactical Combat Force (TCF)* C2 Reserve

* Requires Augmentation
** May form part of the covering force

(1) Deep Operations. Aviation enhances the joint force warfighting capabilities by allowing the commander to exploit the entire battlefield by projecting combat power rapidly throughout the battlefield. Due to their speed, maneuverability, and long-range direct fire capabilities, Army aviation forces are well suited for operations over extended ranges. Deep operations are normally conducted for two purposes: *set the conditions for the close battle and attack the enemy in depth*. Successful aviation deep operations require deliberate planning, detailed coordination, and timely, accurate intelligence. SEAD, EW, and deception are critical to the success of deep operations. Information flow between forward (deep aircraft) and rear CPs requires enhanced communications capabilities.

(2) Close Operations. Army aviation performs close operations as part of the main battle or while executing the mission of the reserve. During close operations, aviation forces enable the commander to mass the effects of overwhelming combat power, attack an assailable flank, and add depth to the close battle. In the close battle, aviation forces can perform the following actions: provide immediate antiarmor firepower; attack moving, attacking, withdrawing, or bypassed forces; maneuver to blunt enemy counterattacks; envelop enemy forces; attack enemy counterattacking forces; and conduct air combat operations.

(3) Rear Operations. Aviation forces employed in rear operations can function as a tactical combat force (TCF) headquarters for planning and executing rear combat operations. If augmented with additional maneuver, CS, and CSS assets, aviation forces can provide initial response force for Level III incursions; conduct air

movement of personnel, supplies, and equipment to assist in CSS operations; and provide surveillance and assist in securing LOCs.

3. Capabilities and Limitations

Table VII-3 lists primary employment capabilities and limitations of Army Aviation.

Table VII-3. Army Aviation Capabilities and Limitations

Capabilities	Limitations
Night Operations	Consumes Large Amounts of Classes III, V, and IX
Long Range Direct Fires	Environment
Maneuverability	Maintenance Support Requirements
Shock Effect	Security
Mobility	
Ability to Close Rapidly	

The paragraphs that follow describe other aviation capabilities and limitations:

a. Operations. Army aviation units can normally sustain six to eight flight hours per 24-hour period per available airframes. They cannot be employed continuously without periodic maintenance of airframes and sufficient rest for personnel. While combat operations are enhanced by keeping personnel on a set cycle—either night or day—flexibility of scheduling is permitted. The aviation commander assesses the operational risk using factors of METT-T/METT-TC to identify the risk to mission accomplishment. A 24-hour break in cycles is normally required for aircrews to transition from night-to-day or for day-to-night operations. The operating environment also has an impact on the sustainability of flight operations. For example, increased maintenance requirements in a dusty or sandy environment could adversely impact available flight hours.

b. Security. The combat power of aviation forces resides in the aircraft. While on the ground, aviation forces are vulnerable to attack. Aviation forces use dispersion as a prime means of security. Except for limited local security, aviation forces must rely on external support for protection. Aviation unit assembly areas normally collocate with other units in the rear area.

c. Weather Support. Army Aviation Task Forces deploy with attached USAF weather specialists. These airmen and NCOs provide weather forecasting and infrared (IR) crossover information for the Task Force Commander's integration into mission planning.

d. Sustainment. The division aviation support battalion (ASB) and AVIM company provide CSS to the Army aviation task force. The ASB/AVIM slice provides Class IX and maintenance support including phase maintenance, weapons system

maintenance, and augmentation of the Army task force's AVUM. If the aircraft deploy by sealift, the aircraft require reassembly upon arrival. During deployment, aviation support elements may augment the notional army brigade forward support battalion to support the aviation element or the division support command (DISCOM) may organize the required CSS assets to form a service support element in DS of the aviation element (Class III, V, medical, maintenance).

(1) Class III. Army rotary-wing aviation and ground vehicles use a common fuel: JP-8. Aviation fuel testing requirements are conducted by POL specialists. Aviation units normally receive Class III through unit distribution. Army rotary-wing aircraft use either the open port or closed circuit refuel (CCR) nozzle. The FARP normally carries both nozzles.

(2) Class V. The aviation unit receives Class V (air and ground) through the ammunition supply point (ASP) established for the notional army brigade.

4. Command and Control

Aviation units receive their mission as any other maneuver unit and require the same planning time and considerations as ground units.

a. Army Airspace C2. While Army aircraft can operate under positive control, procedural control is the preferred method. Normally, only those aircraft with mission profiles above the coordinating altitude operate under positive control. Most Army rotary-wing aviation operates under procedural control.

b. Procedural Control. Procedural control for Army rotary-wing aircraft is based primarily on graphic control measures such as standard Army aviation flight routes (SAAFR), air corridors, air control points (ACPs), high density aircraft control zones (HIDACZs), restricted operations zones (ROZs), and airspace coordination areas (ACAs). When a notional army brigade is attached to a MEF, these and/or other airspace control measures (ACMs) require coordination through the Marine TACC.

(1) Air Routes. Army rotary-wing aviation missions normally operate below the coordinating altitude. Within the parent unit's rear area (division rear to brigade rear boundary) rotary-wing aircraft follow SAAFR. Forward of the brigade rear boundary, mission support aircraft operate under the supported brigade operations center.

(2) Air Corridors and Routes. For deep attacks/air assault missions, units follow a corridor through the brigade area to the FLOT. From the FLOT forward units normally follow air routes. Corridors may be assigned forward of the FLOT if a detailed knowledge of the threat is available. In the close battle, attack/air assault units follow corridors/routes from the brigade rear boundary to a release point short of their BP, and then occupy their BPs using battle formations.

(3) Identification Friend or Foe (IFF). Army rotary-wing aircraft use IFF equipment that is compatible (modes I-IV) with the MACCS. Army rotary-wing aircraft comply with IFF procedures outlined in the airspace control order (ACO).

(4) Joint Air Tasking Order (ATO). Aviation units may be listed on the joint ATO for coordination and deconfliction; however, they do not receive their missions through the joint ATO. The focal point for Army aircraft entry into the joint ATO is through the notional army brigade S3 Air. Neither the notional army brigade S3 Air nor the aviation unit can input into or receive the joint ATO electronically. Joint ATO input is through MSE (primary) or radio (secondary). The notional army brigade and aviation element must rely on higher headquarters to provide a hardcopy of the joint ATO.

c. Army Integration into the MACCS.

(1) Notional Army Brigade Level. A2C2 is the responsibility of the notional army brigade commander for operations within brigade's boundaries. While there is no formal A2C2 special staff element at brigade level, primary staff responsibility resides with the S3 air. Other members of the brigade A2C2 element include the S2, FSO, air defense artillery (ADA) and aviation liaison officers, and the ALO. The air traffic services (ATS) LNO is also included in the A2C2 element if ATS are augmented from corps.

(a) Responsibilities. The A2C2 staff element is primarily responsible for the following tasks:

• Developing and coordinating local airspace control SOPs, plans, and annexes.

• Coordinating and integrating airspace user requirements within the area of operations, including other services and adjacent units.

• Identifying and resolving airspace user conflicts.

• Approving, staffing, and forwarding requests for special use airspace to the next higher headquarters.

• Maintaining A2C2 information, displays, and maps.

• Integrating Army airspace user activities, i.e., reconnaissance, surveillance, and target acquisition, deep attacks, and ATACMS launches.

• Representing ground force interests in the development of ACMs.

• Maintaining status of current/proposed airfields, landing zones, pick-up zones, and drop zones.

(b) Procedures. The notional army brigade coordinates airspace and air control measures through the Marine TACC. To ensure proper coordination, the notional army brigade should provide a LNO with the TACC. Since it is not a formalized staff element, the brigade A2C2 staff is not equipped with assets (communications automated data processing (ADP) equipment) dedicated to the A2C2 mission. Coordination is accomplished via MSE, FAX, or radio.

(2) A2C2 Planning Considerations. The following planning considerations guide development of A2C2 control plans:

(a) Maximize use of procedural control using a variety of ACMs. When established, these ACMs reserve airspace for specific users, and restrict/control their actions.

(b) Employ positive control only where such control is required and possible. To do so, a means must exist to identify and locate airspace users and to maintain communications with them.

(c) Ensure that the commander's intent and scheme of maneuver govern design of the plan.

(d) Use airspace with maximum freedom consistent with the degree of risk that is acceptable to the commander.

(e) Structure ACMs to ease recognition by airspace users and ground-based weapons crews.

(f) Ensure temporary ACMs are within the boundaries of the command requesting the measure.

(3) ATS. Aviation augmenting a notional army brigade normally does not have Army air traffic service support. For operations within notional army brigade boundaries, Army rotary-wing aircraft normally operate below the coordinating altitude and coordinate with the notional army brigade operations section. For flights outside notional army brigade boundaries or above the coordinating altitude, Army rotary-wing aircraft must contact the Marine TAOC for flight following and coordination.

5. Planning Considerations

a. Planning Time. Because aviation units operate throughout the width and depth of their parent unit's AO, each mission requires detailed analysis, planning and coordination, and rehearsals.

b. Coordination. In addition to the mission information, the following elements require coordination: locations of assembly areas (holding areas) FARPs; BPs; routes into and out of BPs; SEAD/joint suppression of enemy air defense (J-SEAD); EW; and fire support.

(1) Assembly Areas. Typically, aviation operations are dispersed over three separate assembly areas:

(a) Main Assembly Area. Aviation units establish their main assembly area in the division rear. The main assembly area includes the AVIM and associated logistical base. Because this log base is not 100 percent mobile, it requires wheeled vehicle augmentation to move in one lift. The logistical base cannot provide full

maintenance support while moving but requires some type of stable, secure field site to perform maintenance operations.

(b) Tactical Assembly Area (TAA). Units operate deployed away from the main assembly area. Normally, aviation units establish a TAA for limited periods of time toward the rear of the main battle area. This TAA will displace based on the nature of the threat. In a high threat environment, it may displace every 12-24 hours. Limited maintenance is performed in this assembly area.

(c) Forward Assembly Area (FAA). For mission execution, aviation units operate from FAAs. FAAs reduce response time while providing security for aircraft and aircrews. Aircraft may shut down while in the FAA.

(d) Holding Areas (HA). For security, HAs are planned throughout the battle area to provide dispersion. Army attack aircraft normally do not shut down in HAs. They normally remain in a HA for 10-15 minutes, while the scout conducts final coordination and reconnaissance of the battle position.

(2) FARP.

(a) FARP Location. Aviation units normally locate in the rear area given their relatively high payoff value to the enemy. FARPs are normally located outside medium artillery range from the FEBA but will be pushed forward as required to support operations. FARP assets normally travel to their initial location with the combat trains of the ground maneuver forces for security. Primary protection of these assets is accomplished by continuous displacement during combat operations into preplanned locations. (The Army will provide a small security element to include a stinger team or other air defense assets.)

(b) FARP Interoperability. Prior coordination is required to resolve equipment and procedural differences when Army and USMC aircraft use the same FARP. FARP personnel must receive training on standardized procedures, such as hand and arm signals, weapons safe signals, lighting, and aircraft peculiar requirements.

(3) BP. Attack helicopter BPs are normally planned to the flanks of ground maneuver units using METT-T/METT-TC. A company normally requires 5-7 km for a battle position. In open terrain, however, a company BP may require as much as 7-10 km for dispersion, while a battalion BP may require 15-20 km for dispersion.

c. Synchronization. The maneuver of Army aviation forces must be integrated into the commander's intent and overall concept of the operation to capitalize on the synergistic effects of synchronization. The flexibility of Army aviation allows the commander to strike the enemy in depth and at unexpected times and places. Army aviation attacks vary in length depending on the employment method. An attack battalion may select one of three methods: continuous attack, phased attack, or maximum destruction. Aviation assets lack the endurance of armored and mechanized forces. As a result, the initiative gained by the use of Army aviation is

lost if the enemy is allowed time to recover from an attack. Thus, aerial maneuver must be closely synchronized with ground operations to achieve optimum results.

d. Deep Operations. Aviation deep missions are high risk, high payoff operations. Deep operations are based on the ability of the controlling headquarters to see the battlefield. Thus, corps deep operations may extend forward of the FSCL, while brigade deep operations may extend only a few kilometers beyond the FEBA. Table VII-4 depicts a sample deep operations GO/NO-GO planning matrix.

Table VII-4. Aviation Deep Operations GO/NO-GO Planning Matrix

Factor	Go	No Go	Comments
Assets available for reconstitution			
SEAD available			
Artillery positioned for SEAD/HPT targeting			
Enemy location and array confirmed			
Light conditions			
Weather conditions			
Enemy air defense located			
Time on station			
Availability for next mission			
Terrain favorable for attack			
A2C2 deconflicted			
Electro-optic conditions favorable			
Fixed-wing support available			
Risk vs. Payoff			

Deep operations involve the following planning factors:

(1) Acceptable Risk—Mission/Destruction Criteria. Army aviation generally uses three terms to describe destruction criteria: *destroy*—kill more than 70 percent of the target; *attrit*—kill more than 30 percent but less than 70 percent of the target; *disrupt*—kill less than 30 percent of the target.

(2) Abort Criteria. The force commander sets the abort criteria for early mission termination based on potential friendly losses or the minimum number of aircraft required for the mission. If the commander states that the abort criteria is four UH-60s, the mission automatically aborts when less than four UH-60s remain mission capable. Abort criteria considers the nature and location of the threat, acceptable risk, and location of the aircraft when they become non-mission capable.

(3) Intelligence. Detailed intelligence (target, landing zone [LZ] location, ADA systems and locations) is paramount to the success of the operation. Every detail of

the synchronization and coordination of the mission is based on available intelligence. The better the intelligence, the lower the risk and the greater the probability of mission completion.

(4) SEAD. SEAD is vital for all operations. Primary SEAD planning is the responsibility of the FSO. One technique is to coordinate mission times and locations with aviation strike packages from another service. This allows the attack mission to take advantage of the strike package SEAD. Normally, all known and suspected enemy air defense locations along the ingress/egress and battle positions are targeted. Army attack aircraft can provide their own local SEAD; however, this technique is not normally the preferred method.

(5) Fire Support. In addition to SEAD, fire support in the target area is essential when the target is within field artillery range. A quick-fire channel facilitates that support. If attack helicopters are employed against a dispersed target, artillery may be required to attack that portion of the target attack helicopters cannot engage. Artillery may need to relocate to provide support.

(6) Friendly ADA Systems and Air Corridors. Establish air corridors that do not interfere with air defense and artillery. This prevents fratricide and keeps aviation operations from degrading the responsiveness of fire support. Weapons control status (WCS) along air corridors is normally *weapons hold* during ingress and egress.

(7) Terrain Management. The attack or assault unit requires terrain for HA, FARP locations, and FAA. A minimum of two FARPs and holding areas are planned for each operation. Primary planning concerns for FARPs are security, wheeled vehicle access, and location away from main enemy avenues of approach.

(8) Debriefings. Information brought back after a cross-FLOT mission is of a transitory nature and requires intelligence processing as soon as possible. To facilitate information flow, an intelligence representative from higher headquarters extracts priority intelligence from aircrews. OH-58D camera tapes can be used by higher headquarters using a standard 8mm tape player.

e. Close Operations. Listed below are those factors that are unique to integrating aviation into close operations:

(1) Fire Support. Normally, aviation units do not have their own fire support. However, attack battalions do have FSOs assigned. Fire support for aviation requires integration with close operations. Normally this is done by establishing a quick-fire channel with priority of fire to the committed aviation unit.

(2) Coordination and Synchronization. Employment in close operations requires the same exact timing as in deep operations. Aircraft that arrive too early will have insufficient fuel available when the operation begins. If aircraft arrive late, the target engagement window may be closed. Uncoordinated FA support may interfere with the attack by obscuring the target.

(3) Fratricide Prevention. Fratricide prevention is a primary concern in close operations. The best preventive measure is good situational awareness. Air and ground units must know where respective forces are operating. Employment of ACMs—BPs, engagement areas (EAs), and FSCMs assist in the control of friendly fires.

(4) Downed Aviator/Aircraft Evacuation/Security. Every effort must be made to recover downed aircrew and aircraft. Army aviation units normally plan for self-recovery of downed aviators/aircraft. The tactical situation may require ground forces to extract crew members or provide security to aircraft downed due to enemy fire or maintenance. The overall joint combat search and rescue (JCSAR) plan requires integration of all available assets.

f. Rear Operations. Aviation forces may be effectively employed in rear-area operations as described below:

(1) TCF. Army aviation battalion-sized task forces and higher can function as a TCF (Army) headquarters for planning and executing rear operations if augmented with additional maneuver, CS, and CSS assets. Lift units can either augment or be augmented with ground forces for this mission. Attack and air cavalry can serve as the initial response force but are restricted by their lack of ability to close with dismounted infantry units.

(2) Integration into the Reconnaissance and Security Plan. Because aviation operations transit the entire battlefield, they can provide surveillance and assist in securing LOCs. The division or brigade rear CP integrates aviation units into the rear reconnaissance and security plan. By varying their routes, arriving and departing aircraft can conduct counter-reconnaissance operations in rear areas.

(3) Air Movement/Air Assault. Aviation units can support rear operations by conducting air movement of personnel, supplies, and equipment to assist in CSS operations. Air assault units support rear operations by providing lift for the TCF.

g. Security Operations. In security operations aviation forces enhance ground movement because of their speed and maneuverability and the firepower provided by armed helicopters. Army aviation units perform screening missions but require augmentation for guard and cover missions.

(1) Army Aviation assets may be positioned to react rapidly to enemy contact initiated by the covering force or the advance guard.

(2) Aviation's speed and mobility allow them to cover large frontages.

(3) The reaction time and firepower of armed helicopters allow them to be committed quickly in a meeting engagement.

h. Reserve. The flexibility of Army rotary-wing aviation makes it ideally suited for the reserve mission. When assigning the reserve mission to an Army aviation unit, commanders must consider the duration of the mission. Aviation units cannot

maintain a 100 percent readiness capability, as required for the reserve, for extended periods. Army aviation units must reduce their capability to maintain 24-hour operations.

6. Marine Aviation

When not deployed, Marine aircraft squadrons are consolidated by type/model/series within Marine aircraft wings in the Continental United States (CONUS). The aviation component of the MAGTF, the ACE, is task organized based on the mission to support MAGTF operations. The C2 of Marine aviation is governed by the *Policy for Command and Control of USMC TACAIR in Sustained Operations Ashore* in JP 0-2.

7. Aviation Combat Element

Forming an ACE brings fixed- and rotary-wing aircraft assets into a task-organized unit to meet specific contingency requirements. The resulting ACE consists of a mix of fixed- and rotary-wing squadrons, groups, or wings along with supporting organizations. Logistics support of an ACE is addressed in Chapter IX, and major C2 organizations were addressed in Chapter II. Figure VII-1 depicts a notional ACE organization.

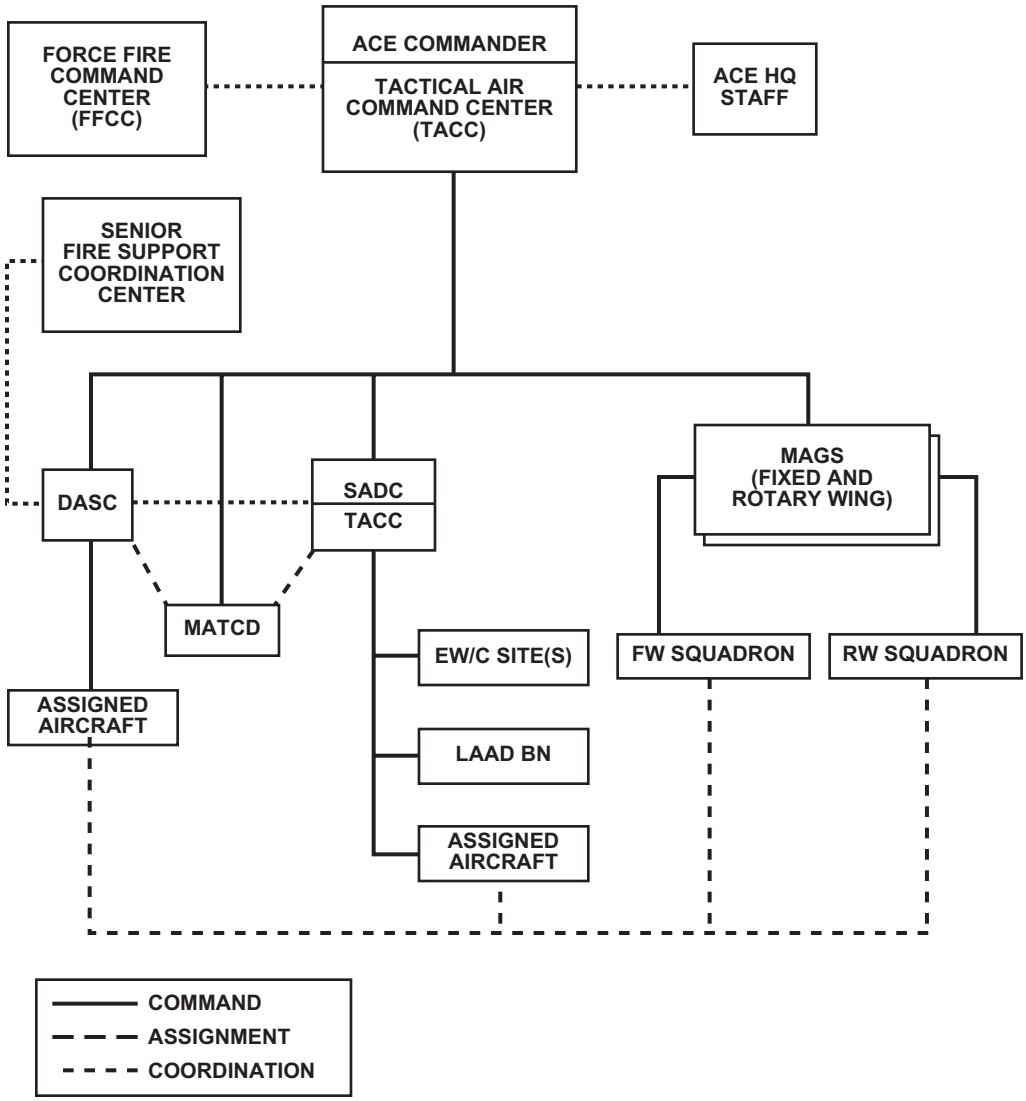

Figure VII-1. Notional MEF ACE Organization

8. Marine Aviation Functions

Marine aviation performs six functions: antiair warfare (AAW), offensive air support (OAS), assault support, air reconnaissance, EW, and control of aircraft and missiles.

a. AAW. AAW is action taken to reduce enemy air and missile threats to acceptable levels before they can be brought to bear against friendly forces. The basic principles of AAW are destruction-in-depth, centralized command and coordination, decentralized control, and mutual support.

(1) AAW Tasks. Active AAW tasks are surveillance (including detection, identification, and evaluation), weapons control, and weapons employment. Surveillance enables the MAGTF to know what the air threat is and how to counter

that threat. Detection is the actual locating of threat aircraft or missiles through radar, visual, or electronic means. Identification is *separating the good from the bad*. Evaluation includes defining the most dangerous threats. Weapons control is putting a friendly AAW-capable asset against an enemy target, often by getting that asset to the right place at the right time. Weapons employment is the physical destruction of a threat target. Table VII-5 shows the capabilities of various facilities and systems to conduct active AAW tasks.

Table VII-5. Asset Capabilities for Antiair Warfare Tasks

Asset	Surveillance	ID	Evaluation	Weapons Control	Weapons Employment
TAOC	X	X	X	X	
EW/C	X	X	X	X	
LAAD	X	X		X	X
F/A-18	X	X	X	X	X
AV-8	X	X			X
AH-1W	Visual	X			X
Others	Visual	X			

(2) AAW Organization. Organization for AAW is centered around the TAOC and its early warning/control site(s). The TAOC, through the Sector Air Defense Commander (SADC), provides control, surveillance, and management over assigned airspace. The TAOC controls the intercept of enemy targets identified within its assigned sector. Chapter II provides a detailed discussion of ACE C2.

(3) AAW Categories. AAW is either offensive antiair warfare (OAAW) or defensive (air defense). A MAGTF uses OAAW and air defense to reduce or eliminate the effectiveness of the enemy's air effort.

(a) OAAW. OAAW operations attack enemy air weapons systems before launch or before they assume an attacking role. OAAW operations primarily consist of air attacks that destroy or neutralize hostile aircraft, airfields, missile launch sites, and supporting systems. The organization for offensive AAW centers on the TACC, with the DASC serving as a conduit for coordinating SEAD, targeting, and attack with the GCE, and the SADC/TAOC providing the facilitating coordination for theater ballistic missile defense (TBMD) attack operations.

(b) Air Defense. Air defense consists of both active and passive methods. Passive air defense includes measures taken to minimize the effects of hostile air attacks. These include cover, concealment, deception, dispersion, and protective construction. Passive air defense is a MAGTF-wide responsibility, and not strictly an aviation function. Active air defense is the direct action taken to destroy attacking enemy aircraft or missiles through the use of aircraft, missiles, non-air defense weapons, and certain EW measures.

b. OAS. OAS has two categories: CAS and Deep Air Support (DAS). Fixed- and rotary-wing aircraft perform these missions. CAS and DAS can be performed both short of and beyond the FSCL; however, CAS requires detailed integration with the fire and movement of the supported force. DAS requires varying degrees of coordination but rarely approaches the detailed integration required by CAS.

(1) Factors. A high enemy threat consisting of an air defense system of integrated fire control systems and EW capabilities may restrict OAS and require SEAD. Limited visibility, weather in the target area, target identification, and aircraft time on station (target distance from base and fuel loads) also can affect OAS effectiveness.

(2) CAS. In addition to operating from fixed air bases, aircraft provide CAS from forward operating bases, carriers, and amphibious ships.

(a) CAS Roles. CAS allows the concentration of firepower at the time and place requested by a ground commander to support fire and maneuver. By supporting the attack or providing forward or flank security, CAS can support offensive ground operations. Defensively, CAS can support ground forces by providing highly mobile reserve forces and providing fire to areas not covered by surface fires.

(b) CAS Structure. The DASC coordinates CAS. The DASC takes requests over radio nets for the two different types of CAS: preplanned and immediate. Preplanned CAS is further broken down into preplanned scheduled and preplanned on-call. Units request CAS on the tactical air request/helicopter request (TAR/HR) Net. After prioritizing the requests and finding the assets, the DASC directs aircrews to check-in for terminal control on the Tactical Air Direction (TAD) Net. One of the potential terminal control agencies is the FAC. The FAC provides liaison and communications between ground commanders and air control agencies and exercises control of aircraft during the terminal phase of CAS missions to ensure accuracy of weapons delivery. Figure VII-2 depicts CAS request procedures.

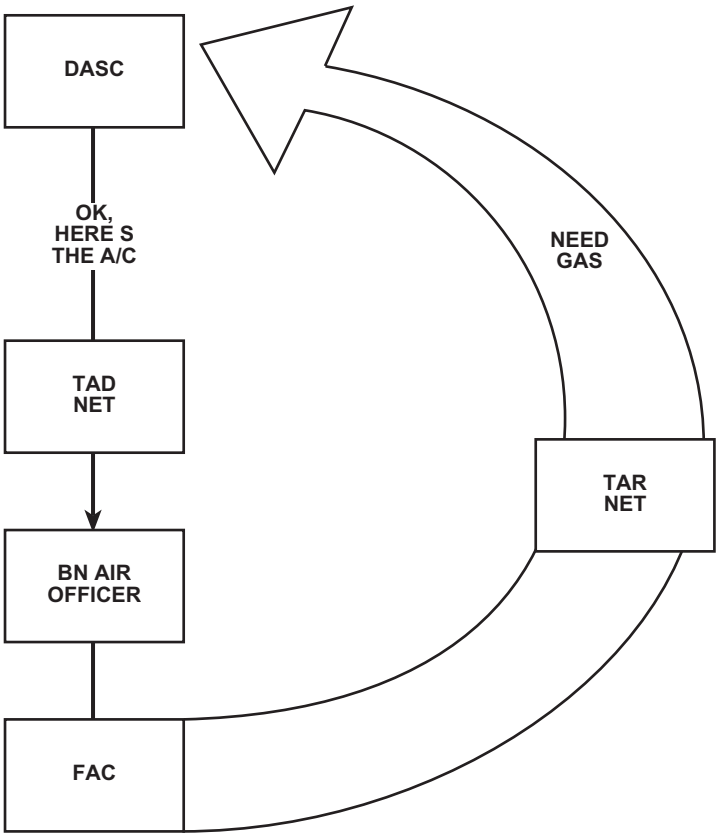

Figure VII-2. Close Air Support (CAS) Request Procedures

(3) DAS. DAS includes armed reconnaissance and air interdiction (AI). Armed reconnaissance missions are launched to locate and attack targets of opportunity, not to attack specific targets. AI missions are primary DAS missions because they deny use of specific areas, routes, facilities, or forces before they can be used against friendly forces.

c. Assault Support. Assault support provides operational and tactical mobility and logistics to the MAGTF. Assault support allows focusing of combat power at the decisive time and place to achieve local combat superiority. Assault support aircraft mobility and speed permit the commander to take full advantage of fleeting battlefield opportunities.

(1) Categories. Assault support categories are combat assault transport, air delivery, aerial refueling, air evacuation, tactical recovery of aircraft and personnel (TRAP), air logistical support, and battlefield illumination.

(a) Combat Assault Transport. Combat assault transport employs helicopters to rapidly deploy forces, bypass obstacles, or redeploy forces to meet an enemy threat. Combat assault transport also uses transport helicopter assets to provide logistic support to ground forces.

(b) Air Delivery. Air delivery operations employ fixed-wing assets to move equipment and supplies to forward operating bases or remote areas. Airdrops are used for delivery when distances, closed LOCs, lack of adequate airfields, required delivery times, or prohibitive ground tactical situations exist.

(c) Aerial Refueling. KC-130 aircraft conduct aerial refueling to support flight ferrying of aircraft, extend aircraft time on station, or to extend mission ranges.

(d) Air Evacuation. Air evacuation, by both fixed- and rotary-wing transport aircraft, are used to move personnel and equipment from forward operating bases or remote areas. This includes medical evacuation and retraction of forces.

(e) TRAP. MAGTFs perform self-supporting CSAR operations and external CSAR support using the TRAP concept. TRAP should not detract from primary warfighting functions. TRAP does not include the search portion of CSAR and is only performed when survivors and their locations are confirmed.

(f) Air Logistical Support. When ground forces are located beyond helicopter range, air logistical support is performed by fixed-wing aircraft. These operations include troops, equipment, and supplies.

(g) Battlefield Illumination. Fixed- and rotary-wing assets can perform battlefield illumination, either visible or invisible to the naked eye.

(2) Requesting Support. Requests for assault support are coordinated by the DASC in the same manner as CAS requests. (See paragraph 8b[2][a,b].)

d. Air Reconnaissance. Air reconnaissance provides a major means for collecting current raw data on terrain, weather, hydrography, and the enemy situation, for intelligence processing and distribution. Manned and unmanned systems perform air reconnaissance. Any aviation unit can perform visual reconnaissance. EW aircraft detect, identify, evaluate, and locate enemy electromagnetic information. The DASC coordinates air reconnaissance operations as requested by intelligence organizations or ground forces.

e. EW. EW systems collect tactical information. EW missions are flown in response to specific requests. EW provides timely information on the enemy, increases the MEB's combat power by disrupting the enemy's use of the electromagnetic spectrum, and ensures the MEB's continued use of the electromagnetic spectrum despite enemy EW.

f. Control of Aircraft and Missiles. The ACE commander controls aircraft and missiles on behalf of the MEB commander using the MACCS to coordinate employment of facilities, equipment, communications, procedures, and personnel.

(1) Principal MACCS Operating Agencies.

(a) TACC. As the senior MACCS agency, the TACC is the operational CP for planning, supervising, and directing the employment of Marine aviation's six functions. The TACC is divided into a future operations section responsible for planning "*tomorrow's*" air activities and a current operations section responsible for supervising the execution of aviation support for the MEB.

(b) DASC. Collocated with the senior FSCC (physically or electronically), the DASC is the principal air control agency for directing air operations directly supporting ground forces. In addition to processing and coordinating requests for air support, the DASC also coordinates air missions requiring integration with the ground forces (e.g., CAS, assault support, and designated air reconnaissance missions). It is important to understand that the DASC provides only procedural control.

(c) TAOC. The TAOC is responsible for airspace control and management. Employing long-range and gap-filler air surveillance radars, the TAOC provides real-time surveillance of assigned airspace and the direction and positive control of AAW operations involving aircraft and surface-to-air weapons. The SADC is normally collocated with the TAOC.

(d) Marine Air Traffic Control Detachment (MATCD). MATCD is the primary terminal air control organization for forward operating bases. MATCD provides friendly aircraft with continuous all-weather radar approach, departure, and en route air traffic control services. Also, the MATCD is capable of fielding one mobile team to provide non-radar air traffic control services to remote operating locations.

(2) Other MACCS Control Agencies. Additional air control and coordination agencies, although not organic to the ACE, are fully integrated into MACCS through communications, doctrine, and procedures. These agencies are grouped into terminal air controllers and coordinators, airborne controllers and coordinators, and helicopter support teams (HSTs).

(a) Terminal Air Controllers and Coordinators. Terminal air controllers and coordinators control the delivery of ordnance, cargo, or personnel to specific targets or locations. Terminal air controllers include TACPs and MAGTF CE air sections.

• TACP. TACPs are organic to GCE infantry regiments and battalions, LAR battalions, and tank battalions. TACPs include air officers, FACs, and enlisted communicators as shown in Table VII-6. The TACP provides liaison and communications between the supported ground unit and the appropriate air control agency. Infantry and LAR battalions each have two forward air control parties (FACPs) attached to their TACPs. The primary mission of FACPs is to control fixed- and rotary-wing aircraft during the terminal phase of CAS.

Table VII-6. TACP/FACP Personnel		
Unit Type	**TACP Personnel**	**FACP Personnel**
Infantry Regiment	One air officer	None
Infantry Battalion	One air officer	2 FACs/8 enlisted communicators
Tank Battalion	One air officer	None*
* Tank/reconnaissance air officers perform FACP and communication duties		

• MAGTF CE Air Sections. The air section, assigned to the CE operations center, consists of two to four air officers and appropriate administrative support. It provides the MAGTF commander with current air employment and availability information and advises the commander and staff on matters of air support. The air section also participates in air employment planning and targeting.

(b) Types of Airborne Controllers/Coordinators. The ACE provides three types of airborne controllers/coordinators that function as part of the MACCS. These are forward air controllers (airborne) (FAC(A)), tactical air coordinators (airborne) (TAC(A)), and assault support coordinators (airborne) (ASC(A)). These agencies can support specific ground organizations or limit their activity to coordination of aircraft.

• FAC(A). The FAC(A), operating from an aircraft, exercises terminal control of OAS aircraft in addition to artillery and NSFS coordination. The FAC(A) is the airborne extension of the FAC and cannot perform both FAC(A) and TAC(A) duties simultaneously.

• TAC(A). The TAC(A), operating from an aircraft, coordinates rotary- or fixed-wing CAS aircraft. The TAC(A) is the on-site extension of the DASC and FSCC. Principal responsibilities are to deconflict aircraft and coordinate air assets with other supporting arms. The TAC(A) coordinates with TACPs, FSCCs, ASC(A)s, and artillery (including NSFS) fire direction centers. The TAC(A) may or may not be employed, depending on mission requirements and availability.

• ASC(A). The ASC(A) provides coordination and procedural control of aircraft during assault support operations. The ASC(A) is an airborne extension of the DASC. The ASC(A) supports assaults through C2, airspace coordination, and integration of operations. An ASC(A) is employed when the scope and complexity of the assault support operation demands.

(c) HST. The HST is an organization equipped to facilitate the pickup, movement, and landing of heliborne forces, equipment, and supplies within landing and pickup zones. HSTs also assist in evacuation of casualties. HST operations are the responsibility of the heliborne unit commander. Figure VII-3 depicts the HST organization.

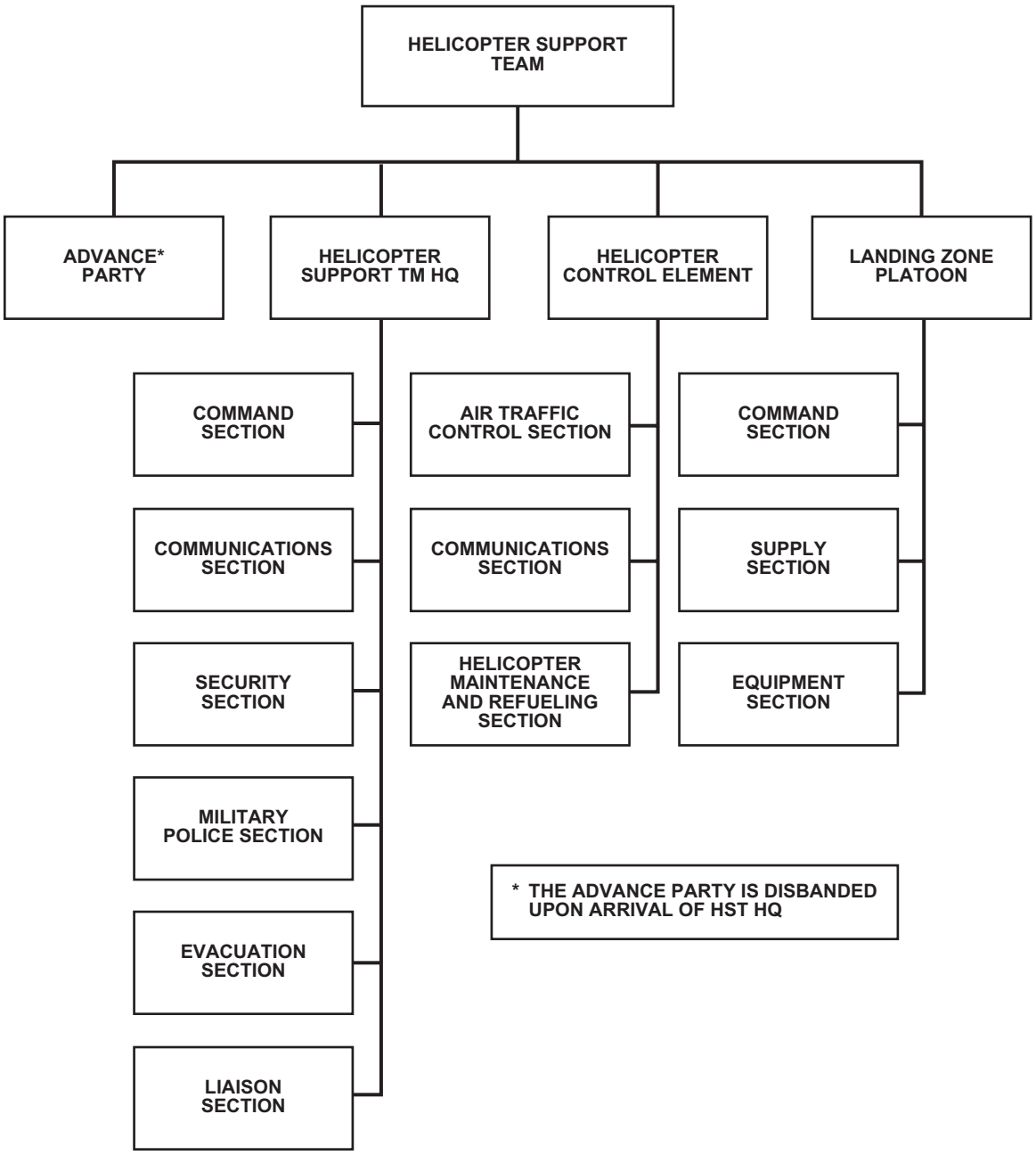

Figure VII-3. Helicopter Support Team (TM)

g. MEB Aircraft Capabilities. MEB aircraft capabilities are shown in Tables VII-7 and VII-8.

Table VII-7. MEB Fixed Wing Aircraft Capabilities				
Capabilities	**AV-8B**	**F/A-18A/C**	**F/A-18D**	**EA-6B**
Missions	AAW/CAS/ DAS/AIR RECCE	AAW/CAS/ DAS/AIR RECCE	AAW/CAS/ DAS/AIR RECCE	ECM/AIR RECCE
Ordnance/load/ guns	Conventional 8000lbs 25mm	Conventional 13700lbs 20mm	Conventional 19500lbs 20mm	HARM
Navigation	TACAN/INS/FLIR/Radar/GPS	TACAN/INS/FLIR/Radar/ADF/GPS	TACAN/INS/FLIR/Radar/ADF/GPS	TACAN/INS/ FLIR/Radar/ ADF/GPS
Communications	2 UHF-AM 2 UHF-FM 2 VHF-AM 2 VHF-FM	2 UHF-AM 2 UHF-FM 2 VHF-AM 2 VHF-FM	2 UHF-AM 2 UHF-FM 2 VHF-AM 2 VHF-FM	2 UHF-AM
Crew	1	1	2	4
Speed	.9 Mach	1.8 Mach	1.8 Mach	.72 Mach
Range	500 nm	700 nm	800 nm	1000 nm
Laser capability	Track	Track/ Designate (*C*)	Track/ Designate	None

Note: Two multihead radios that each operate in any of the following four bands: UHF-AM, UHF-FM, VHF-AM or VHF-FM. These aircraft do not have eight radios.

Key
ADF: Automatic Direction Finder
FLIR: Forward Looking Infrared
ILS: Instrument Landing System
INS: Inertial Navigation System
TACAN: Tactical Air Navigation
RECCE: Reconnaissance
HARM: High speed anti-radiation missile

Table VII-8. MEB Rotary Wing Aircraft Capabilities				
Capabilities	**AH-1W**	**UH-1N**	**CH-46E**	**CH-53D (E)**
Missions	CAS/DAS/AAW	Assault	Assault/Log	Assault/Log
Ordnance	TOW/AIM-9 / Hellfire/2.75" & 5' Rkts	2.75" Rkts	None	None
Armament	20 mm	7.62 MG/GAU-2 Mini-gun	2 x .50 cal MG	2 x .50 cal MG
Navigation	TACAN/ADF/ GPS/Doppler	TACAN/ADF/GPS	TACAN/ADF/GPS	TACAN/ADF/ GPS
Communications	UHF/VHF-FM	UHF/VHF-FM/HF SATCOM	UHF/VHF-FM/HF	UHF/HF/ VHF-FM/AM
Crew	2	4	4	4 (3)
Speed	140kts	126kts	140kts	170kts (173kts)
Range	280nm	170nm	200nm	250nm (480nm)
Laser Capabilities	Track/Designate (NTS)	None	None	None
PAX	None	6	15	37 (56)

Key
ADF: Automatic Direction Finder
FAE: Fuel Air Explosive
NTS: Night Targeting System
TACAN: Tactical Air Navigation System
TOW: Tube launched, Optically tracked, Wire guided missile system

9. Notional Army Brigade Under MEF Control

All Army aircraft that deploy as part of the notional army brigade can expect to perform missions in support of the MEF. Army aviation assets will be part of an aviation battalion task force. This task force can be under the command of a cavalry squadron commander, an attack battalion commander, or an assault/lift battalion commander. Depending on METT-T/METT-TC and the number of aviation assets attached to the notional brigade, an aviation brigade commander could be placed in command of these aviation battalion(s). In such a case, one or more of the subordinate battalion commanders (i.e., cavalry, attack, or assault/lift commander) would be assigned to serve with the aviation brigade commander. Army aircraft capabilities are shown in Table VII-9. The following narrative addresses mission planning factors to consider when integrating Army aviation with MEF operations.

Table VII-9. Army Aviation Aircraft Capabilities and Limitations				
Aircraft	**OH-58D**	**AH-64**	**UH-60A/L**	**CH-47D**
Endurance at cruise (Plus 30 minute reserve)	2+00	2+00	2+15	2+30
Normal Cruise	90-100	100-140	100-140	120
Troop Seats	0	0	14	33
Maximum allowable gross weight	5,200	21,000	22,000	50,000
Useful Load	NA	6,895	8,000	19,000
Maximum recommended external load	NA	6,200	8,000	19,000
Weapons	ATAS Hellfire .50 Cal. 2.75 rockets	30 MM Hellfire 2.75 rockets	M60	M60

a. Air Cavalry Operations. The air cavalry OH-58D Kiowa Warrior provides the JFC with an excellent night capable reconnaissance and fire support aircraft. The aircraft are normally employed in pairs and can see farther than other organic notional army brigade assets. C2 is retained at the command level capable of providing the aircraft connectivity with intelligence and fire support channels. The capabilities of the aircraft allow for direct sensor-to-shooter linkage via a digital quick-fire channel with an appropriate attack system such as MLRS. Coordinating laser codes allow the aircraft to designate for precision-guided munitions.

b. Attack Battalion Operations. The attack battalion is normally employed by the headquarters that has the ability to track the high payoff target the battalion is directed to attack. If employed by the MEF, the attack mission is listed on the Marine ATO with mission C2 through the TACC. The DASC and TAOC have the ability to provide threat updates and maintain communication between all elements. The TACC responsibilities include the coordination of the SEAD and fixed-wing support. An Army liaison team should be present at the TACC to facilitate operations. A direct air support center (Airborne) (DASC(A)) may be assigned to facilitate coordination and communications.

c. Air Assault Operations. When performing air assault missions, air assault aircraft are normally OPCON to the ground force commander. The air mission commander, normally the ground force unit commander, is responsible for the planning of the air assault mission. The aviation unit provides liaison to assist in mission planning.

d. Class V. USMC and Army attack helicopters employ 2.75 inch folding fin aerial rockets (FFAR), TOW, and Hellfire missiles. Either service can use the other service's common ammunition, depending on the airframe.

10. MEB Under Army Corps Control

a. MEB Interoperability in the Theater Air Control System (TACS). The MEB must interface with the TACS when supporting Army operations in order to access air support when requirements exceed its organic capabilities. In AMCI, the MEB retains its organic air assets and makes excess sorties available for use by the JFC. Once air support requirements exceed organic capabilities, requests for additional preplanned or immediate air support flow through the TACS system. Marine liaison officers at the corps TOC facilitate fire support planning and requests' flow. Corps FSE targeteers prioritize MEB requests with those of the corps and other subordinate elements for submission to the battlefield coordination detachment (BCD) at the joint air operations center (JAOC). Figure VII-4 illustrates Army/USMC air operations connectivity.

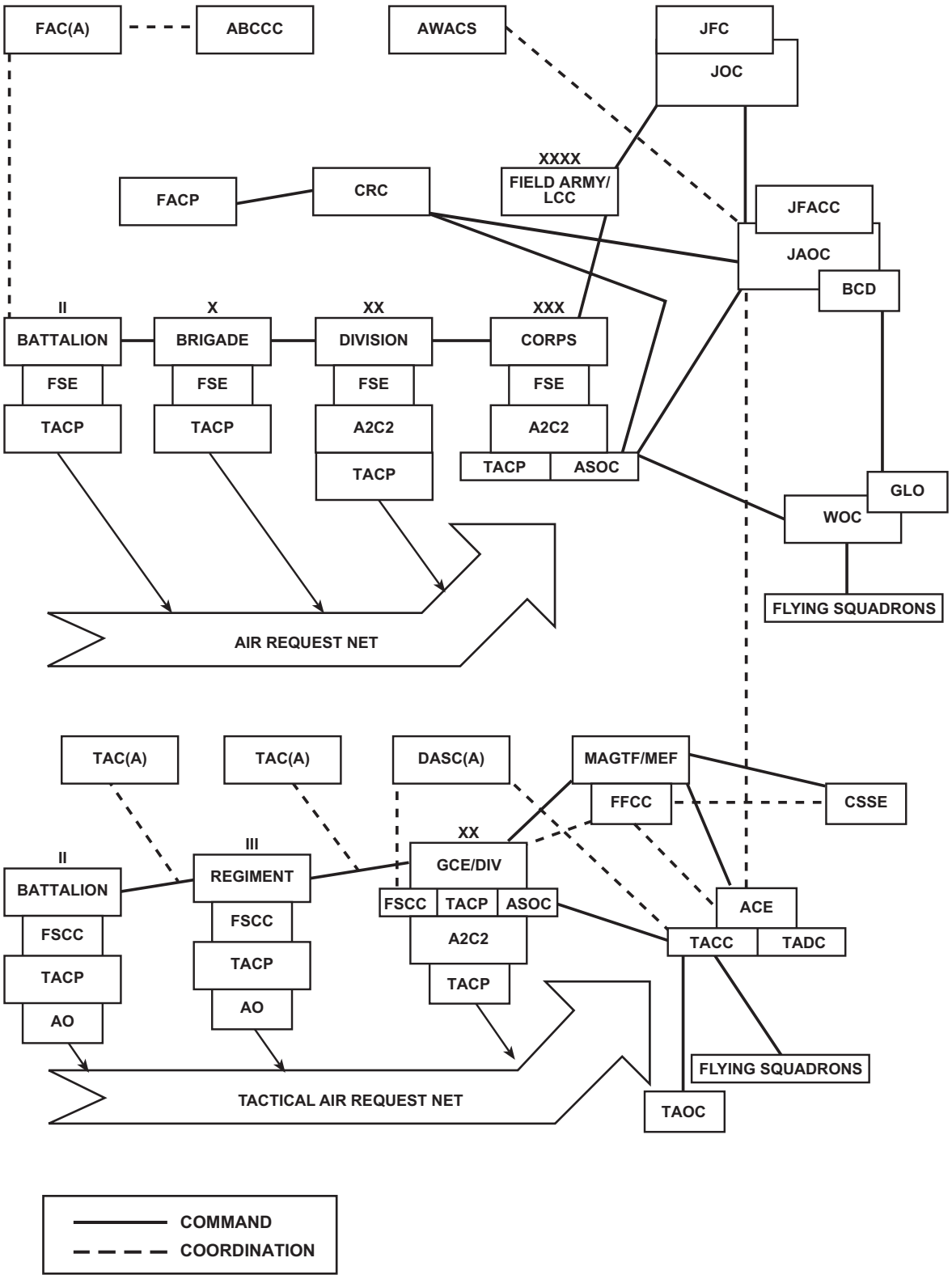

Figure VII-4. US Army/USMC Air Operations Connectivity

b. Requests for AI and CAS.

(1) Preplanned Requests (AI and CAS). Preplanned requests include submissions for AI and scheduled and on-call CAS. As seen in Figure VII-5, preplanned requests flow from the MEB FSCC to the corps FSE where the G3 staff, Marine liaison officer, and corps ALO assist planners in validating and prioritizing air support request submissions.

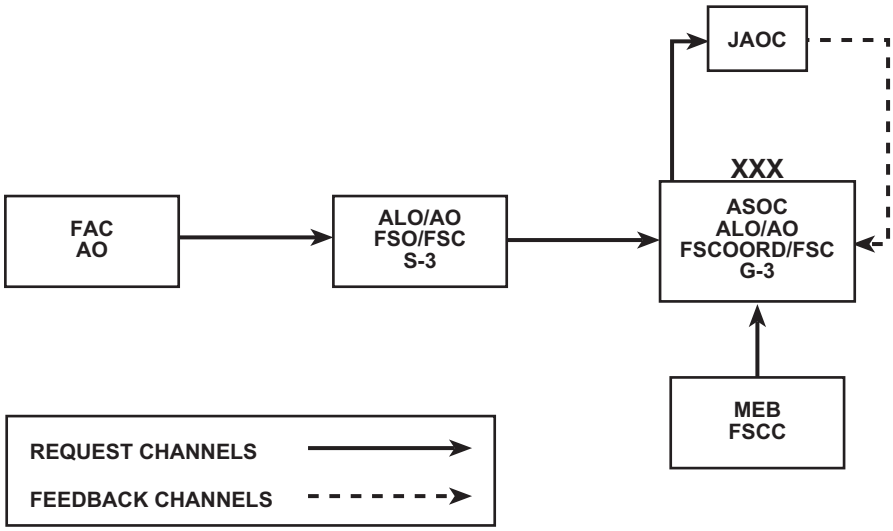

Figure VII-5. CAS/Air Interdiction (AI) Support Request Channels

(2) Scheduled CAS Requests. Scheduled requests require the requesting MEB to identify the target and the desired time on target (TOT) well in advance. Scheduled requests offer greater opportunity for coordination and provide a greater chance that aircraft have the proper weapons load for the assigned targets. When requesting scheduled CAS, the specific target and time for the attack is identified and continuously updated in advance so that after launch, minimum communications are necessary for final coordination.

(3) On-call (CAS) Requests. On-call requests identify an anticipated CAS requirement be available during a period of time, with the exact time and place coordinated as required by the tactical situation. On-call CAS allows the requesting commander to indicate a time frame, probable target type, and place where the need for CAS is most likely. On-call aircraft are configured with the proper ordnance for anticipated targets (e.g., antiarmor) and maintain an alert status for a specified period of time. On-call requests can specify either ground or airborne alert.

(4) Immediate (CAS) Requests. Immediate requests arise from situations that develop once the battle is joined. Requesting commanders use immediate CAS to exploit opportunities or to protect the force. Requests for immediate CAS flow through the TAR Net to the DASC. If the DASC determines there are not enough organic air assets to support the request, the DASC passes the request to the TACC.

The TACC passes the request to the air support operations center (ASOC) at the Army corps level. The ASOC coordinates the request with corps G3 Air for approval and commits CAS assets if available (see Figure VII-6). If on-call CAS is unavailable, the corps ALO advises the corps G3/G3 air to divert corps preplanned CAS missions or forward the request to the JAOC.

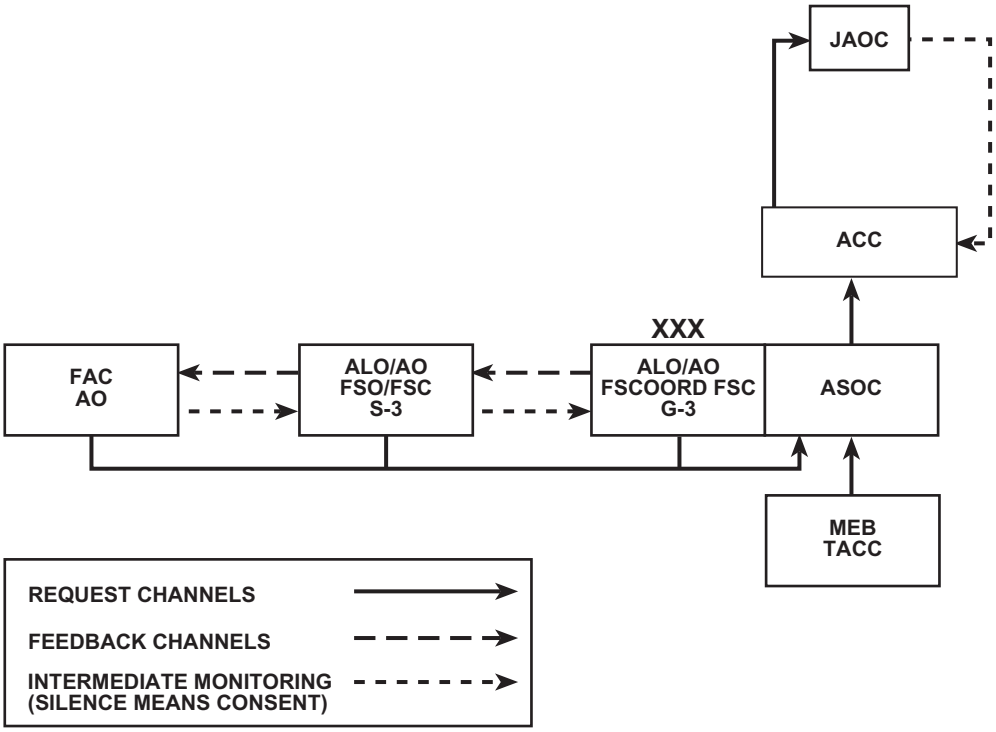

Figure VII-6. Immediate CAS Request Channels

(5) Request Formats. The US Message Text Format (USMTF) program establishes the standards and prescribes the rules and conventions governing message text formats. Air support requests will be submitted using the format prescribed in JP 3-09.3, *Joint Tactics, Techniques, and Procedures for Close Air Support*.

(a) Voice Backup. Units that do not have the capability to transmit messages, or when time constraints require, will use the joint tactical air strike request (JTAR), DD Form 1972, voice format. (See JP 3-09.3.)

(b) Mission Data. For preplanned CAS and AI requests, information is passed down through maneuver force channels. Data may be included in the joint ATO, mission order, or fire support plan. For approved immediate CAS requests, mission data is passed down the same air request net used by the requesting unit to pass the request. Mission data is passed using the JTAR Section 3 format to the requesting unit. At minimum, mission data includes the following information:

- Mission number.

- Call sign.
- Number and type of aircraft.
- Ordnance.
- Estimated TOT/on-station.
- Contact point.
- Initial contact.
- Call sign and frequency of final control agency.
- Laser codes.

(c) Request for Airlift Support. The MEB submits requests for airlift support through the Army Air-Ground System (AAGS). The AAGS provides the command and staff interface between the Army and the Air Force. The AAGS exercises responsibility for requesting intra-theater airlift movements as illustrated in Figure VII-7.

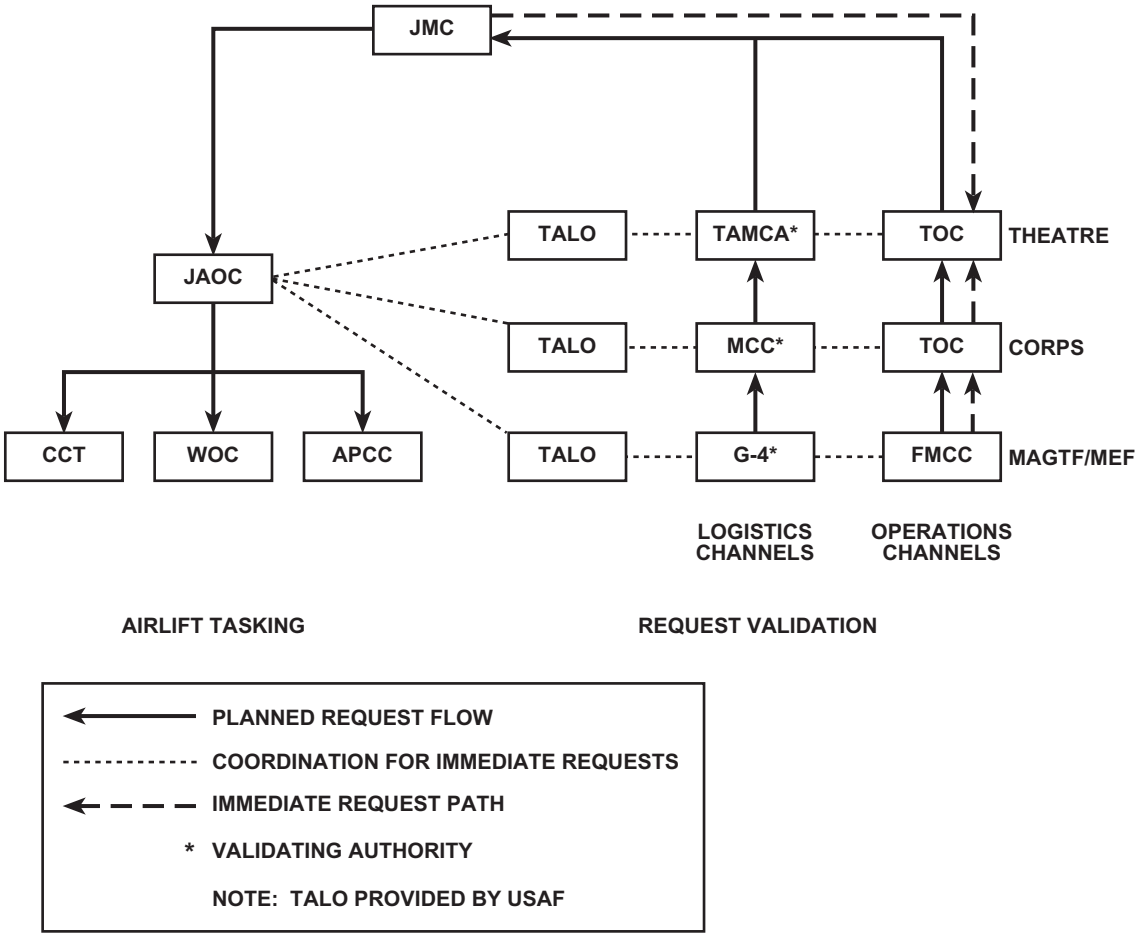

Figure VII-7. Airlift Support Request Channels

(6) Types of Requests. Any organization in a joint force may request theater airlift support. Requests are supported based on operational necessity, the availability and suitability of alternate surface transportation modes, the Department of Defense (DOD) Transportation Movement Priority System, and the JFC's apportionment. Commanders and logistic planners should not hesitate to request theater airlift, if air movement enhances an assigned mission. Once made, airlift requests are handled through Army logistics channels.

(a) Planned Requests. When air movement requirements are known or projected in advance, they are handled as planned requests through normal logistics channels. Requests for planned airlift flow from the MEB force movement control center (FMCC) to the corps transportation officer, who coordinates with the Air Force theater airlift liaison officer (TALO); Marine liaison officers and Army operations staff officers coordinate Army/Marine airlift priorities. The corps transportation officer then forwards the request to the joint movement center (JMC) for coordination as shown in Figure VII-7. The requirement is passed to the JAOC. The JAOC tasks missions in the joint ATO to satisfy the requirements. Channel missions and most special assignment airlift missions (SAAMs) result from planned requests. In all cases, the request should allow for operational lead-time. This is the time required to generate actual sorties in support of a specific requirement. Lead time varies, depending on the scale of the request, available forces, and the theater air planning process.

(b) Immediate Requests. Immediate requests satisfy urgent employment, sustainment, or extraction requirements. MEB requests for immediate airlift flow to the corps transportation officer. The corps TALO assists logistics planners in forwarding the request to the BCD at the JAOC. (See Figure VII-7.)

(c) Emergency Requests. When air movement requirements are more time-critical than can be handled by an immediate request, they will be handled as emergency requests. Emergency requests satisfy pressing tactical requirements, such as the evacuation of wounded or the immediate resupply of units engaged in combat. They are usually coordinated as immediate requests with two procedural variations. Required approvals, validations, and taskings may be accomplished by voice and followed with the routine documentation. The JAOC director, representing the joint force air component commander (JFACC), may upon receipt of a voice notification from the JMC of the emergency request, divert theater airlift forces supporting planned requests or launch a separate mission to fulfill the requirement. In such a case, the JAOC should advise the JMC of the action and the status of the pending request.

11. Communications Integration

a. Army Aviation Communications Equipment. Army aviation units are equipped with FM, UHF, SATCOM, and VHF radios. Army ground elements are only equipped with FM (SINCGARS). Aircraft use SINCGARS (FM), UHF, and VHF. Scout and lift (C2) aircraft normally use two SINCGARS FM radios; attack aircraft employ only one FM (SINCGARS) radio. The secure SINCGARS serves as the primary means for communicating with ground units. For air-to-air

communications, Army aviation units use UHF and VHF. Most Army scout and attack aircraft are equipped with UHF with Have Quick II capabilities. For a detailed description of communication equipment and capabilities see Tables VII-10 and VII-11.

b. Army Aviation Communications Radio Nets. Aviation units, (battalion and above) normally operate on three FM nets (internal and higher headquarters): a command net, an operations and intelligence (O&I) net, and an administrative and logistics (ADMIN/LOG) net. Other than flight operations, aviation company/troops normally are only one-net capable. They normally monitor the command net of their higher headquarters.

(1) Command Net. A secure command net, controlled by the S3, is used for C2 of the units. All assigned and attached units normally operate on this net. Priority only traffic is passed via this net.

(2) O&I Net. The O&I net is controlled by the S3 and monitored by the S2 and S3. It functions as a surveillance net when required. All routine operations and intelligence reports are sent on this net.

(3) ADMIN/LOG Net. This net is controlled by the S3 and monitored primarily by the S1 and S4. It is used for administrative and logistics traffic.

c. AMCI Communications Capabilities. The following tables describe the communications capabilities of joint aviation assets. Table VII-10 summarizes Army aviation equipment. Table VII-11 summarizes USAF, USN, and USMC fixed-wing communications capabilities. Table VII-12 provides a ready reference for the communications equipment found at various fire support and air support control agencies.

Table VII-10. Army Aviation Communications Equipment Summary				
Aircraft Type	**Radios**	**Frequency Band (Note 1)**	**Frequency Hopping**	**Secure Capable**
UH-60	1-AN/ARC-201 1-AN/ARC-201 1-AN/ARC-115 1-AN/ARC-164	VHF-FM VHF-FM VHF-AM UHF	SINCGARS NO NO Have Quick II	KY-58 KY-58 NO KY-58
CH47-D **(Note 3)**	2-AN/ARC-201 1-AN/ARC-115 1-AN/ARC-164 or –116	VHF-FM VHF-AM UHF	SINCGARS NO **(Note 4)**	KY-58 NO NO
OH-58D **(Note 5)**	2-AN/ARC-201 1-AN/ARC-186 1-AN/ARC-164 1-AN/ARC-199	VHF-FM VHF UHF HF	SINCGARS NO Have Quick II NO	KY-58 YES YES KY-75
AH-64A	1-AN/ARC-201 1.AN/ARC-164 1-AN/ARC-186	VHF-FM UHF VHF	SINCGARS Have Quick II NO	KY-58 NO
AH-64D	2-AN/ARC-201 1.AN/ARC-164 1-AN/ARC-186	VHF-FM UHF VHF	SINCGARS Have Quick II NO	KY-58 NO

Note 1: Frequency bands are as follows:
HF = 2.00 to 29.999 MHz in 1kHz increments.
VHF-FM = 29.950 to 87.975 MHz in 25 kHz increments.
VHF-AM = 108.000 to 151.975 MHz in 25 kHz increments.
UHF = 225.000 to 399.975 MHz in 25kHz increments.

Note 2: The AN/ARC-186 operates either in the VHF-AM or AHF-FM band. Each radio can monitor only one band at a time.

Note 3: Only one AN/ARC-201 is connected to the KY-58. The other one is unsecure.

Note 4: AN/ARC-164 aircraft are Have Quick II capable.

Note 5: The OH-58D has two KY-58s. One is dedicated to a AN/ARC-201. The other is shared between the other three radios.

Table VII-11. USAF/USMC/USN Fixed Wing Aircraft Communications Summary				
Aircraft Type	**Radios**	**Frequency Band (Note 1)**	**Frequency Hopping**	**Secure Capable**
AC-130	2-AN/ARC-164 1-AN/ARC-164 3-AN/ARC-186 2-AN/ARC-190	UHF SATCOM VHF (Note 3) HF	Have Quick II	KY-58 KY-58 NO KY-58 KY-75
EA-6B	2-AN/ARC-159 1-AN/ARC-175 1-AN/ARC-105	UHF VHF HF	NO NO NO	NO NO KY-58
AV-8B	2-AN/ARC-182	(Note 2)	NO	KY-58
A/OA-10	1-AN/ARC-164 1-AN/ARC-186 1-AN/ARC-186	UHF VHF-FM VHF-AM	Have Quick II SINCGARS NO	KY-58 KY-58 NO
B-1B	2-AN/ARC-171 1-AN/ARC-190	UHF SATCOM HF	Have Quick II	YES
B-52H	1-AN/ARC-164 1-AN/ARC-171 1-AN/ARC-190	UHF UHF or SATCOM HF	Have Quick II NO NO	KY-58 NO
F-14	1-AN/ARC-182 1-AN/ARC-59	(Note 2) UHF	Have Quick II NO	KY-58 KY-58
F-15E	2-AN/ARC-164	UHF	Have Quick II	KY-58
F-16	1-AN/ARC-164 1-AN/ARC-186	UHF VHF (Note 3)	Have Quick II NO	KY-58 NO
F/A-18 (Note 4)	2-AN/ARC-182 2-AN/ARC-201	(Note 2) VHF/UHF	NO Have Quick II	KY-58 KY-58

Note 1: Frequency bands are as follows:
HF = 2.00 to 29.999 MHz in 1kHz increments.
VHF-FM = 29.950 to 87.975 MHz in 25 kHz increments.
VHF-AM = 108.000 to 151.975 MHz in 25 kHz increments.
UHF = 225.000 to 399.975 MHz in 25kHz increments.

Note 2: The AN/ARC-182 is a multiband radio that operates in any one of four bands: standard VHF-FM, VHF-AM band, UHF, or 156.0-173.975 MHz VHF-FM. It can monitor only one band at a time.

Note 3: The AN/ARC-186 operates either in the VHF-AM or AHF-FM band. Each radio can monitor only one band at a time.

Note 4: F/A-18s are fitted with either two AN/ARC-182 radios or two AN/ARC-210 radios.

Table VII-12. TACP/FAC Communications Equipment				
Component	**Radios**	**Freq Band (Note 1)**	**Frequency Hopping**	**Secure**
USA FIST	AN/PRC-77 AN/PRC-177 AN/VRC-12 AN/VRC-24	VHF-FM		Yes No No No
USAF TACP	AN/GRC-206 AN/PRC-77 AN/PRC-117 AN/PRC-104 AN/PRC-113	HF, VHF-FM, VHF-AM, UHF VHF-FM VHF-FM HF VHF-AM, UHF	Have Quick II No Yes No No	Yes Yes No Yes Yes
USMC TACP	AN/PRC-77 AN/PRC-119 AN/PRC-104 AN/PRC-113 AN/VRC-12	VHF-FM VHF-FM HF VHF-FM, UHF VHF-FM	No No No No No	Yes No Yes No No
SOF SOTAC	AN/PRC-117D AN/PRC-126 LST-5	UHF, VHF-FM (Note2,3) VHF-FM UHF SATCOM	No No No	Yes Yes Yes

Note 1: Frequency bands for ground radios are as follows:
HF; 2.000 to 29.999 MHz in 1 khz increment.
VHF-FM; 29.950 to 75.950 MHz in 50 kHz increments.
VHF-AM; 116.000 to 149.975 MHz in 25 kHz increments.
UHF; 225.000 to 399.975 Mhz in 25 kHz increments.

Note 2: AN/PRC-117D VHF-AM/FM frequency range is 116.000 – 173.995 MHz.

Note 3: AN/PRC-117D UHF-AM/FM frequency range is 225.000 – 419.995 MHz.

Chapter VIII

AIR AND MISSILE DEFENSE

1. Background

The rapid and continuing proliferation of advanced weapons and technology expands the scope and complexity of attaining air superiority, and protecting friendly forces and vital interests from air and missile threats. Adversaries are rapidly gaining access to advanced aircraft and missiles, and the growing diversity of threats requires a more responsive, flexible, and integrated defense to effectively counter them. In air and missile defense operations, both the Army and the Marine Corps use the same basic doctrine, principles, employment guidelines, and IFF procedures. Air and missile defense includes all defensive measures designed to destroy attacking aircraft or missiles in the earth's envelope of atmosphere or to nullify or reduce the effectiveness of such attacks. Integrated Army and Marine Corps air and missile defense operations provide force protection and contribute to the joint force's freedom of action.

2. Integrated Army and Marine Corps Air and Missile Defense Operations

a. References. In an effort to avoid repetition and restating previously released doctrine and procedures, the following publications provide an exceptional source for planning joint air and missile defense operations:

(1) JP 3-01, *Joint Doctrine for Countering Air and Missile Threats*

(2) JP 3-01.5, *Doctrine for Joint Theater Missile Defense*

(3) JP 3-52, *Doctrine for Joint Airspace Control in a Combat Zone*

(4) JP 3-56.1, *Command and Control for Joint Air Operations*

(5) Multiservice Publication: Army FM 3-01.15 (FM 100-103-1) and Marine Corps Reference Publication (MCRP 3-25D [5-61]), *Multiservice Procedures for Integrated Combat Airspace Command and Control*

(6) Multiservice Publication: Army FM 3-01.21 (FM 90-43) and MCRP 3-42.1A, *Multiservice Procedures for Joint Theater Missile Target Development*

(7) Multiservice Publication: Army FM 3-01.15 and MCRP 3-25E, *Joint Integrated Air Defense System*

b. Air and Missile Defense Operations. Air and missile defense operations provide for protection of friendly forces, bases, lines of communication, and selected geopolitical assets through the four pillars of air and missile defense: passive air defense; active air defense; attack operations; and a command, control, communications, computers, and intelligence (C4I) system. Attack operations are not discussed in this chapter, because air defense units do not perform this task.

(1) Passive Air Defense. Passive air defense encompasses all measures, other than active air defense, taken to minimize the effectiveness of hostile air and missile attacks. These measures include deception, reconstitution, redundancy, detection and warning systems, and the use of protective construction.

(2) Active Air Defense. Active air defense is direct defensive action taken to destroy, nullify, or reduce the effectiveness of hostile air and missile threats against friendly forces and assets. It includes the use of aircraft, air defense weapons, electronic warfare, and other available assets.

(3) C4I System. The required C4I architecture should consist of interoperable systems that provide complete coverage against a diverse air and missile threat. Systems are interconnected with commanders at all decision and execution levels to aid in the proper integration of friendly forces' missions. The C4I architecture should provide the timely intelligence and operational information needed to plan, employ, coordinate, detect, deconflict, execute, and sustain multiservice air and missile defense operations. Effective C4I systems help commanders fuse geographically separated operations into a focused effort.

c. Command and Support Relationships. Relationships between air defense units and other units may be either command or support. The JFC establishes relationships based on the estimate of the situation and the recommendation of the area air defense commander (AADC).

(1) Command Relationships.

(a) Operational Control. The parent organization retains administrative and logistic responsibilities, unless the order states otherwise, when placing an air defense unit OPCON to another unit. OPCON is appropriate for tactical operations of generally short duration requiring dedicated air defense.

(b) Attachment. The supported force provides administrative and logistic support to attached air defense units. An air defense unit may be attached to a maneuver unit on an extended, independent operation where the parent air defense battalion cannot provide effective support.

(c) Further Attachment or OPCON. When possible, air defense units attached or OPCON to maneuver units are further attached or placed under the operational control of an air defense unit within the maneuver force.

(2) Support Relationships. Table VIII-1 describes the recommended support relationship and inherent responsibilities to guide the planning and operational employment of air defense units.

(a) Direct Support. A direct support mission furnishes a specific element of the joint force dedicated air defense support.

(b) Reinforcing. An air defense unit with a reinforcing mission augments the coverage of another air defense unit committed to a specific element of the force.

Assigning this mission commits both the reinforcing and reinforced air defense units to that specific element.

(c) General Support Reinforcing. An air defense unit with a general support reinforcing mission supports the force as a whole with a second priority to augment the coverage of another air defense unit.

(d) General Support. An air defense unit with a general support mission supports the force as a whole.

Table VIII-1. Inherent Responsibilities of Air Defense Standard Tactical Missions

An air Defense Unit with a mission of:	Has air defense priority established by:	Have the air defense units located by:	Have the air defense units positioned by:	Establishes liaison with:	Establishes communications with:
General Support (GS)	(1) The supported commander. (2) The supported commander through the reinforced air defense commander.	The commander assigning the mission in coordination with the supported force ground commander.	The air defense fire unit commander in coordination with the local ground commander.	As required by commander assigning GS mission.	As required by commander assigning GS mission.
General Support Reinforcing (GSR)	The supported commander through the reinforced air defense commander.	The commander assigning the mission in coordination with the supported force ground commander.	Air defense fire unit commanders in coordination with the reinforced air defense unit commander and the local ground commander.	As required, but including the reinforced air defense commander.	As required, but including the reinforced air defense unit.
Reinforcing (R)	The supported commander through the reinforced ADA commander.	The reinforced air defense commander in coordination with the supported force ground commander.	Air defense fire unit commanders with approval of the reinforced air defense unit commander and the local ground commander.	As required, but including the reinforced air defense commander.	As required, but including the reinforced air defense unit.
Direct Support (DS)	The supported commander.	The DS air defense commander with approval of the local ground commander.	Air defense fire unit commanders with the approval of the local ground commander.	Supported unit commander.	Supported unit.

d. Prioritization of Limited Air and Missile Defense Assets. Developing the JFC's air and missile defense priorities is an essential task for any theater. The prioritizing of assets requiring protection increases the effectiveness of the limited number of air and missile defense weapon systems. While the air defense priorities are the JFC's priorities, the AADC develops the priorities for consideration. One method frequently used to develop priorities is to assess the factors of criticality, vulnerability, recuperability, and the threat (CVRT). Priorities can be separated into two categories: theater missile defense and air breathing threats. Other factors to consider when developing priorities include METT-T/METT-TC, the aerial portion of the IPB, and the supported commander's intent. The elements of CVRT are defined below:

(1) Criticality: The degree to which an asset or force is essential to mission accomplishment.

(2) Vulnerability: The degree to which an asset or force is susceptible to surveillance and attack or to damage if attacked.

(3) Recuperability: The degree to which an asset or force can recover from inflicted damage to continue its mission.

(4) Threat: The probability an asset or force will be targeted by enemy air or missile threats.

e. Organizing for Combat.

(1) When organizing air defense units for combat, four basic employment principles are applied: mass, mix, mobility, and integration to METT-T/METT-TC conditions. These principles are defined below.

(a) Mass: The allocation of a sufficient amount of air defense resources to destroy the enemy air threat to the defended asset.

(b) Mix: The employment of a complementary family of weapons, wherein the capabilities of one system offset the limitations of another system.

(c) Mobility: The ability of a unit to maneuver as easily as the unit it is supporting.

(d) Integration: The synchronized employment of air defense units and systems within the concept of operation and scheme of maneuver.

(2) Considerations for Air Defense Task Organization. The joint force seeks to deploy the best possible weapons mass and mix to support the scheme of maneuver. When organizing air defense units, consider the supported force's mission, commander's intent, and concept of the operation. Additional considerations are listed below:

(a) Proportional weighting of the main effort.

(b) Allocation of available assets to protect critical force priorities.

(c) C4I capabilities.

(d) Logistics supportability: Can the air defense unit support itself completely or will it need assistance from the supported unit?

(e) Impact of other air defense assets in the area of operation.

(f) Transitions to branches or sequels to the operational plan.

f. Liaison. Liaison and coordination requirements between Army and Marine Corps air defense units is essential in establishing integrated air and missile defense. Failing to fully integrate airspace management, early warning to supported units, IFF codes and security requirements, air portion of the IPB, engagement management of hostile threats, and dissemination of friendly air operations can all severely degrade air and missile defense operations.

(1) Notional Army Brigade - MEF Liaison Requirements. The notional army brigade requires two liaison teams to establish necessary air defense liaison with the MEF. Recommended team personnel include a company grade officer, an experienced noncommissioned officer, and one enlisted specialist; team equipment consists of an AM/FM radio-equipped HMMWV. One team collocates with the SADC operations facility/TAOC as subject matter experts on the notional army brigade's air defense capabilities and employment, and facilitates information exchange. A second team collocates with the Marine TACC to assist in airspace coordination and air defense planning and operational execution.

(2) MEB - Corps Liaison Requirements. The MEB normally provides two liaison elements to the corps that facilitate planning and advice on the MAGTF's air defense capabilities and employment. One element collocates with the corps A2C2 element at the corps main to assist in air defense planning; the second collocates with the corps ADA brigade TOC to coordinate air defense execution.

g. Air Defense Control Measures. JP 3-56.1 governs use of air defense control measures germane to Army-USMC operations. Another consideration is the dissemination/ coordination of the ACO. Figures VIII-1 and VIII-2 depict the dissemination flow of measures during integrated operations between the MEF and notional army brigade and between the corps and MEB respectively.

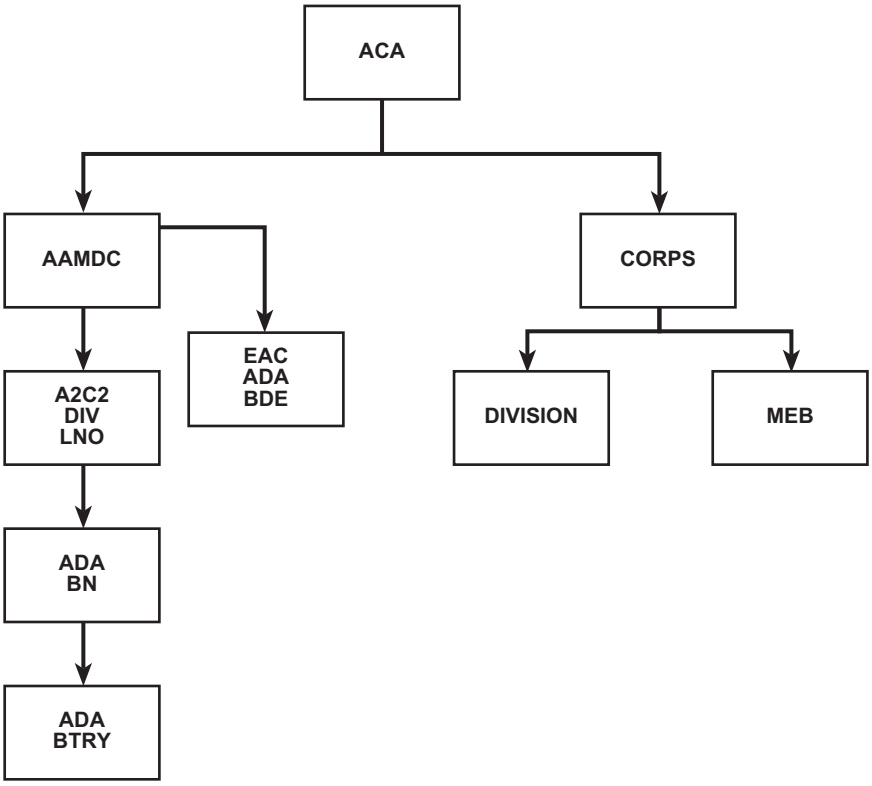

Figure VIII-1. Dissemination Measures Between Corps and MEB

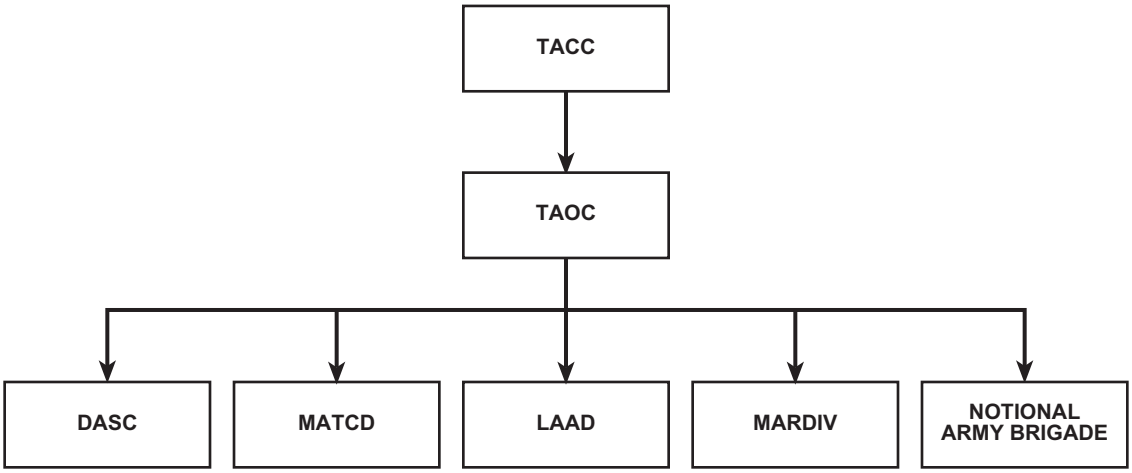

Figure VIII-2. Dissemination Measures Between the MEF and Notional Army Brigade

3. Army Air and Missile Defense Operations

The mission of Army ADA is to protect the force and selected geopolitical assets from aerial attack, missile attack, and aerial surveillance.

a. Army Air and Missile Defense Equipment. The high-to-medium altitude air defense (HIMAD) system consists of the Patriot system and its associated radars. HIMAD systems detect, acquire, classify, identify, select, and engage air and missile threats at extended ranges and in virtually all weather conditions, day or night. Although these systems are not found at the notional army brigade level, HIMAD coverage may be available from the Army corps, or echelons above corps. The second category, SHORAD systems include the Bradley Linebacker System, Bradley Stinger Fighting Vehicle (BSFV), Avenger System, and Stinger Man-Portable Air Defense System (MANPADS). Each of these systems provides low altitude air defense coverage of selected combat, CS, or CSS units and critical assets. Table VIII-2 describes the types and characteristics of Army air defense weapons systems. The table further identifies allocation of systems and the capabilities of each.

Table VIII-2. Types and Capabilities of Army ADA Weapons

Weapon	# System/Unit	Capabilities
Patriot ADA	2 Battalions with 40 Patriot Launchers each (8 per Battery); 5 Early Warning Radars per Battalion	50 KMs - Air Breathing Threat 20 KMs - Tactical Ballistic Missile Threat (unclassified)
BSFV (Stinger)	24 Systems @ ADA Battalion/ Heavy Division; systems per ADA Battery/Heavy Brigade	Range: 4 KMs; Bradley 4 Ready Missiles; 10 Basic Load
Avenger	36 Systems within a Corps ADA Brigade, all within an Army National Guard (ARNG) ADA Battalion; 24 Systems for ADA Battalion/Heavy Division with all Systems in D Battery	Range; 5 KMs; 8 Ready Missiles; Forward Looking Infrared; Laser Range Finder, .50 caliber Machine Gun
MANPADS (Stinger)	24 Systems within a Corps ADA Brigade, all within an ARNG ADA Battalion; 40 systems for ADA Battalion/Heavy Division, with 8 Systems per Battery/ Heavy Brigade	Range: 4 KMs; 6 Ready Missiles

b. Notional Army Brigade Air Defense Equipment. The notional army brigade employs the Bradley Linebacker/BSFV, Avenger, Stinger MANPADS, and sensors/ radars as described below:

(1) Bradley Linebacker/BSFV. The Bradley Linebacker provides mobile SHORAD protection to heavy maneuver forces including heavy divisions and

armored cavalry regiments (ACR). With its shoot-on-the-move capability coupled with slew-to-cue, the Linebacker is capable of killing the broadening spectrum of 21st century threats, including cruise missiles (CM), UAVs, and rotary wing aircraft. The Bradley Linebacker is a BSFV with a standard vehicle mounted launcher (SVML) and associated fire control. Third dimension track data and C2 information is integrated through the FAAD C2 system. In addition to the four ready-to-fire Stinger missiles, the Linebacker is also armed with a 25mm automatic cannon and a 7.62mm coax machine gun common to the BFV. The weapon system includes a Mode 4 IFF capable of positive identification of friendly aircraft. The Linebacker also has a FLIR as an organic sensor. The Linebacker weapons are controlled from inside the turret and can acquire and engage targets while on the move day or night. Not all Army ADA Battalions in heavy divisions have fielded Linebacker. In the absence of Linebacker, heavy units are equipped with the BSFV. The BSFV combines the mobility and armor protection of the Bradley fighting vehicle with the air defense capabilities afforded by the Stinger missile. The BSFV affords the crew survivability and the speed commensurate with the mechanized force it supports. The Stinger team within the BSFV maintains a basic load of six missiles. The team must dismount to engage aerial platforms.

(2) Avenger. The Avenger provides mobile SHORAD protection to divisions, armored cavalry regiments, and corps air defense brigades. The Avenger slew-to-cue weapon system is a Stinger-based weapon system composed of two SVMLs, a M3P .50 cal machine gun, and associated equipment mounted on a heavy HMMWV. Slew-to-cue, in conjunction with FAAD C2I, rapidly and accurately points the Avenger to the hostile third dimension air track. The Avenger also has a Mode 4 IFF capable of positive identification of friendly aircraft and a FLIR as an organic sensor to provide day/night operations. The system has shoot-on-the-move capability.

(3) Stinger/MANPADS. Stinger is a man-portable, shoulder-fired, infrared-homing (heat seeking) guided missile system. It requires no control from the gunner after firing. Stinger has an IFF subsystem that aids the gunner and team chief in identifying friendly aircraft. Limited visibility operations at night restrict the gunners' ability to see and identify the target. A MANPADS team can dismount or operate mounted on a HMMWV. Missile load is reduced to two during dismounted operations, though missiles can be cross-leveled or cached by supported unit to increase numbers of available missiles.

(4) Sensors. The Sentinel Radar provides an early warning third dimensional digital picture to the ADA elements in its sector and zone. The Sentinel Radar is the key air surveillance and target acquisition / tracking sensor for SHORAD weapons in the division and corps sectors. The Sentinel Radar is an active 3D sensor organic to SHORAD units which provides detection and tracking of fixed wing aircraft, hovering and moving rotary wing aircraft, UAV, and CMs out to 40 KM. The Sentinel provides early warning/alerting and cueing data to air defense weapon systems in acquiring and engaging hostile aircraft. It is a trailer mounted, all weather, day and night system, equipped with Mode 3 and Mode 4 IFF. The radar's integrated IFF helps prevent fratricide and its electronic countermeasures-resistant performance supports Army air defense across the full spectrum of conflict.

c. Notional Army Brigade ADA Organization. The ADA battalion commander tailors the notional army brigade ADA organization to meet the situation. The Army has five different types of divisions: light infantry, armored, mechanized infantry, airborne, and air assault. Each division's organic ADA battalion is organized to meet the needs of the type of division it supports. The most likely scenario for Army and Marine Corps contingencies is the use of a brigade from an armored division. A typical armored division's notional army brigade ADA battery normally consists of two Linebacker/BSFV platoons (four BSFVs per platoon—total eight BSFVs); one MANPADS platoon (total 10 MANPADS); a sensor section (total two sensors) from the battalion headquarters; a maintenance platoon; and a headquarters platoon. The Avenger platoon(s) can augment the BSFV battery if the threat (rotary wing, CMs, or UAVs) warrants this task organization. (See Figure VIII-3, Notional Army Brigade ADA Organization.) The ADA battalion commander may send the assistant division air defense officer (ADADO) and FAAD C4I capabilities to allow engagement and force operation linkage to external EW sources.

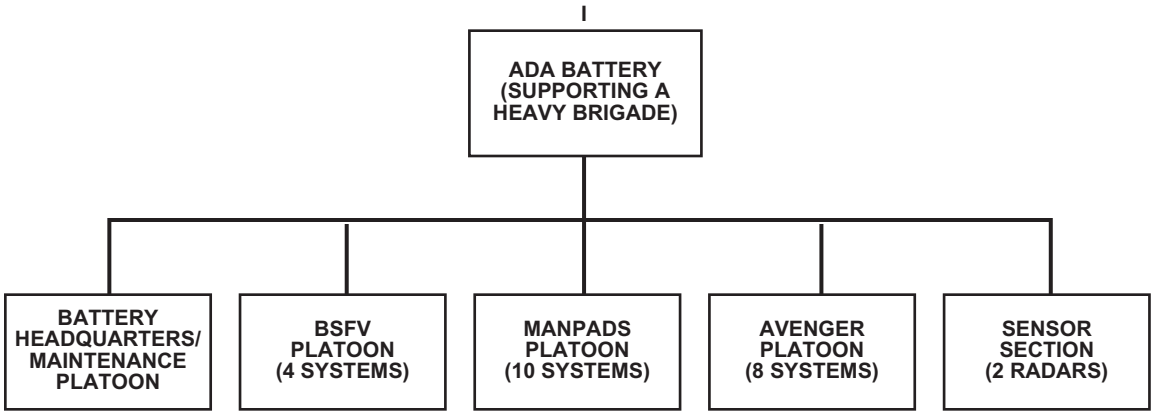

TOTAL SYSTEMS IN BATTERY	
QUANTITY	SYSTEM
8	LINEBACKER/BSFV CREWS
10	MANPAD CREWS
8	AVENGER CREWS (IF ASSIGNED, METT-T DEPENDENT
2	EARLY WARNING RADAR TERMS (FROM HEADQUARTERS BATTERY)

Figure VIII-3. Notional Army Brigade Air Defense Artillery (ADA) Organization

d. Patriot. The Patriot and corps air defense brigade are not organic to an Army division, but it is not uncommon for a Patriot battalion to support a division mission by either GS or DS. The Patriot air defense missile system can defeat air breathing threats and tactical ballistic missile threats. Unclassified ranges for this system are: 50 KMs for the air breathing threat (rotary and fixed wing aircraft), and 20 KMs for a tactical ballistic missile.

e. Corps Air Defense Brigade Organization. A Corps ADA Brigade has two active-duty Patriot Battalions, an ARNG Avenger battalion, and a headquarters battery. Each of the Patriot battalions has five line batteries with eight launchers per battery, giving each battalion a total of 40 launchers. The ARNG Avenger battalion has a total of 36 Avenger crews and 24 MANPAD crews. The ARNG Avenger battalion has three line batteries, with 12 Avenger crews and eight MANPADS crews. (See Figure VIII-4, Corps ADA Brigade Organization.)

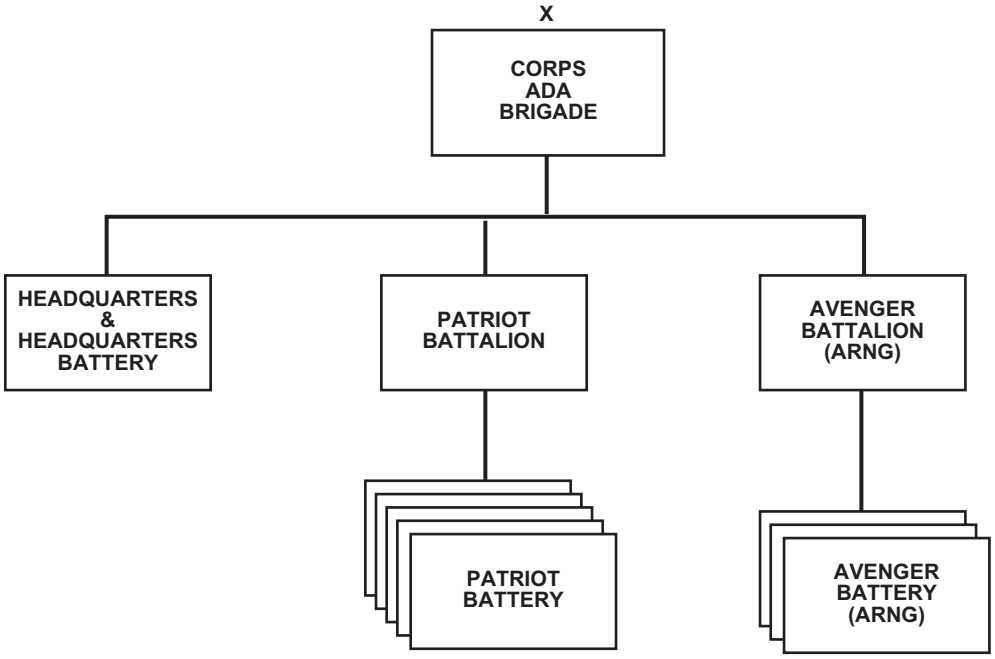

TOTAL SYSTEMS IN BRIGADE	
QUANTITY	SYSTEM
80	PATRIOT LAUNCHERS (8 PER PATRIOT BATTERY)
10	PATRIOT RADARS (1 PER PATRIOT BATTERY)
36	AVENGER CREWS (12 PER AVENGER ARNG BATTERY)
24	STINGER/MANPAD CREWS (8 PER AVENGER ARNG BATTERY)

Figure VIII-4. Corps ADA Brigade Organization

f. Command and Control (Divisional Air Defense Units Only). Based on recommendations from the senior supporting air defense commander, the maneuver brigade commander determines the priorities for air defense coverage, allocation of available air defense assets, and air defense command and support relationships. The battery commander (or senior supporting air defense commander) supports brigade operations based on the unit mission, the commander's intent, and the commander's concept of operations. Successful synchronization of brigade operations hinges on including the ADA officer early and continuously in the planning process.

g. Operations.

(1) Passive Air Defense. The entire notional army brigade has a role in passive air defense. Measures taken to minimize the effects of hostile air actions include the use of cover, concealment, camouflage, deception, dispersion, and protective construction. Early warning is essential in alerting the maneuver force that hostile air action is imminent and protective measures must be initiated. Early warning is achieved by planning, deploying, and employing sensors with the appropriate communications networks. Sensors are generally employed along air avenues of approach to observe named areas of interest and decision points normally designated by the brigade S2. During offensive operations, sensors are employed throughout a zone to provide early warning. Covering and security forces' task organization normally includes FAAD sensors and Avenger for early engagement of threat aerial platforms, with particular focus on surveillance platforms.

(2) Active Air Defense. Maneuver brigades conducting combat operations use organic or attached assets to directly attack hostile aircraft and missiles. These assets include friendly tanks, crew-served weapons, intelligence and electronic warfare systems, attack helicopters, and specific air defense weapons systems.

(3) FAAD C4I System. The FAAD C4I System provides automated assistance in the performance of SHORAD operations and consists of the following FAAD C3I subsystems: Air Battle Management Element (ABME), Air and Missile Defense Coordinator (AMDCOORD), Sensor C2, Battery CP, Platoon/Section CP, and Fire Unit. These subsystems are equipped with computers, displays, and voice and data communications equipment to aid the accumulation, processing, and distribution of a correlated air picture and command, control, communication, and intelligence (C3I) data. The digital data components of the subsystem are connected by SINCGARS/enhanced position location reporting system (EPLRS) and the joint tactical information distribution system (JTIDS) to accomplish the radio frequency communications among the subsystems deployed within the area of operations. JTIDS is used to receive air track data from external track resources.

(a) EPLRS. EPLRS is used for internal data communications. It is used to network the Sensor/C3I subsystems, the ABME, and the AMDCOORD, to exchange air track data, formulate a division air picture and subsequently disseminate air track data, plus battle management data, to a Battery CP, platoon CP, section CP, and fire unit all simultaneously. Early warning is accomplished with the ABME and AMDCOORD receiving air tracks from external sources (Airborne Warning and Control System (AWACS), HIMAD). The ABME correlates and sends those tracks to the six Sentinels tactically located on the battlefield. The sensors correlate that data with their own data then send data to ADA elements in their sector and zone. Air tracks are received at the ADA batteries on their Transportable Computer Unit (TCU) at the platoons, sections, fire units, and LNOs. These TCUs are afforded early warning, which allows them to monitor their area of responsibility and be prepared to engage all hostile air platforms according to the air defense warning (ADW) and WCS at the time.

(b) SINCGARS. SINCGARS provides voice and data communications capabilities.

(c) Simplified Handheld Terminal Unit (SHTU). SHTU performs subsystem functions in C2 and provides the air picture to the section CPs and fire units.

(4) Early Warning. The Air Battle Management Operations Center (ABMOC) and air defense A2C2 receive air tracks from external sources such as the AWACS and HIMAD air defense units. The ABMOC transmits these tracks to sensors tactically located throughout the battlefield. The sensors receive this data, correlate with their own data (40 KM GBS), and send all data to units for engagement. Voice procedures still convey early warning to maneuver forces: battery to brigade and platoon to battalion.

4. MEB Operations

All MAGTFs conduct air and missile defense as part of the AAW function as described in Chapter VII. AAW is based on destruction in depth and begins as far forward as possible with offensive AAW. Offensive AAW attacks enemy aircraft and missile assets before they launch or can assume an attacking role. Destruction or neutralization of enemy airfields, radars, and air defense systems is achieved through preemptive measures, SEAD, and local air superiority. Air defense is conducted to destroy or nullify the effectiveness of enemy air, missile attacks, and surveillance against MAGTF forces and/or facilities. MAGTF air defense is classified as either passive or active.

5. Command and Control

The ACE commander, through his TACC, coordinates MAGTF AAW, although this function of Marines aviation is normally delegated to the SADC. Mutual support and centralized command with decentralized control facilitate AAW. Mutual support is achieved by positioning AAW weapons so that each potential air target is within range of several air defense systems, both concurrently and sequentially. Centralized command and decentralized control permits the best use of available forces, and permits minimum reaction time and maximum flexibility. The SADC manages the MAGTF's air defense battle. Under the SADC's guidance, the TAOC provides control of AAW assets and the surveillance of assigned airspace. AAW surveillance and control are augmented through separately established EW/C sites. Factors influencing the location of TAOCs and EW/C sites employed within an area of operations include the geographical size, terrain features impacting on radar acquisition, and anticipated threat of air activity in the area.

a. The SADC. The SADC operates from the Sector Air Defense Facility (SADF) that normally collocates with the TAOC. The SADF furnishes the SADC and his staff with the capability to perform as an effective battle manager. The facility employs representatives from various MACCS organizations, but primarily from the

TAOC. The SADC is responsible for coordination and management of all active AAW assets within an assigned area through these functional representatives.

b. The TAOC. The TAOC provides airspace control, management, and surveillance for its designated sector or area of interest; provides navigational assistance, including itinerant air traffic control, to friendly aircraft; detects, identifies, and controls the intercept of hostile aircraft and missiles; and deploys EW/C sites to supplement or enhance the TAOC's radar coverage. The SADC coordination of overall AAW operations facilitates the ability of the TAOC to concentrate on real-time control of fighter aircraft and surface-to-air weapons.

6. MAGTF Air and Missile Defense Organizations and Equipment

a. Assets. Organic ACE assets include fixed- and rotary-wing aircraft and surface-to-air missiles (SAMs). The fixed- and rotary-wing aircraft are organic to ACE aircraft squadrons; missile assets are organic to Stinger AAW units.

(1) Aircraft. Most of the fixed- or rotary-wing ACE aircraft have a limited AAW capability. At minimum, any aircraft may be tasked as an AAW surveillance platform. Attack helicopters may be employed as AAW assets when armed with air-to-air weapons. The primary MAGTF fixed-wing AAW asset is the F/A-18 Hornet; however, the AV-8 Harrier may be employed in a secondary AAW role. Employment of fixed- and rotary-wing aircraft in AAW roles will be dependent on the existing situation. MAGTF aircraft capabilities are discussed in detail in Chapter VII.

(2) SAMs. MAGTF SAM capabilities are organic to the LAAD units. LAAD firing units currently employ MANPADS and the Avenger missile system. LAAD units provide close-in, low-altitude surface-to-air weapons fires in defense of the MAGTF. LAAD battalions defend forward combat areas, maneuver forces, vital areas, installations, and/or units engaged in special or independent operations. The LAAD battalion consists of a battalion headquarters, a headquarters and service battery, and two firing batteries. Each of the two firing batteries has three firing platoons and a battery headquarters. Each firing battery is composed of 30 Avenger and 15-man portable Stinger teams. Smaller MAGTFs (i.e., MEUs and Special Purpose Marine Air Ground Task Forces (SPMAGTFs)) are supported by platoons as appropriate to METT-T/METT-TC. MEB and MEF-sized MAGTFs are supported by LAAD batteries and battalions, respectively. Organic HMMWVs provide firing teams with a high degree of mobility. Fire team leaders exercise final firing authority for LAAD teams.

b. AAW Surveillance and Control Systems. MAGTF AAW surveillance and control systems are limited to ground-based systems. Ground-based surveillance capabilities include TAOC surveillance radars, MATCD air traffic control radars, electro-optic systems, and LAAD team visual surveillance.

(1) The long-range radars of the TAOC provide range surveillance out to 300 nautical miles (NM), limited by LOS and the earth's curvature. They provide primary radar azimuth, range, and altitude information up to 100,000 feet (ft). In

addition, they provide identification of friendly aircraft through electronic interrogations.

(2) The shorter-range radars of the TAOC, which can deploy as gap-filler radars for the longer-range radars, are limited by the same LOS factors. They provide primary radar azimuth and range up to 150 NM. They also have a capability to electronically identify friendly aircraft.

(3) The short-range MATCD air traffic control radars provide primary and secondary radar azimuth, range, and altitude information in the airfield areas.

(4) LAAD visual acquisition is particularly effective against low-altitude targets when teams are placed along ingress routes and given limited sectors to cover. Altitude, weather, and environmental factors severely limit their surveillance capability.

Chapter IX

ADMINISTRATION AND LOGISTICS

1. Background

This chapter defines the authority and responsibilities for and control of logistics within and supporting the joint force and defines the six functions of logistics. It also describes notional army brigade and MEB logistics organizations and operations and concludes with integrated logistics operations using the six logistics functions as the framework for discussion (*supply, maintenance, health service support, transportation, other services, and civil engineering*). These functions can be found in JP 4-0. It also briefly discusses administrative functions and augmentation.

2. Authority for Logistics Operations

Unity of effort and unity of command demand that a single command authority be vested with the responsibility and the authority for common logistic support to AMCI operations. The purpose is to improve efficiency and effectiveness and to prevent unnecessary duplication of logistics efforts among the service components.

a. Delegation of Directive Authority. The geographic combatant commander may not delegate directive authority for logistics. However, through his COCOM authority, the combatant commander may delegate directive authority for a common support capability within the joint force JOA to the JFC, service component, or DOD agency (i.e., the combatant commander may *delegate directive authority for a common support capability*). This delegation of authority is usually directed to the dominant user of a particular logistic commodity or service. In some cases, however, the dominant user may not be the most capable service or agency; therefore, the combatant commander must be very deliberate in determining which service or agency, if any, will be required to provide common user logistic support within a joint force. See JP 0-2, *Unified Action Armed Forces*, JP 4-0, *Doctrine for Logistics Support of Joint Operations*, and draft JP 4-07, *Common User Logistics* for more discussion on directive authority for logistics.

b. Exercising Directive Authority. There are three methods of exercising directive authority.

(1) Cross Servicing. Cross servicing logistics is a function performed by military service in support of another military service for which reimbursement is required from the service receiving support.

(2) Common Servicing. Common servicing logistics is a function performed by one military service in support of another military service for which reimbursement is not required from the service receiving support.

(3) Joint Servicing. Joint Servicing logistics is a function performed by a joint force or DOD agency that is jointly staffed and financed in support of two or more military services.

3. Joint Logistics Functions

The Army recognizes six tactical logistics functions: *man, arm, fuel, fix, move, and sustain soldiers and their systems*. The Marine Corps recognizes the six logistics functions defined in joint doctrine: *supply, maintenance, health service support, transportation, services, and general engineering*. To ensure a common approach to logistics operations, the joint standard is the basis used for all discussions throughout this manual. Per JP 4-0, these functions are *supply*, *maintenance*, *transportation*, *civil engineering*, *health services*, and *other services*.

4. Notional Army Brigade Logistics Organizations

Logistics organizations supporting the notional army brigade include the notional army brigade FSB and augmentation provided by the parent division and the corps.

a. Notional Army Brigade FSB

(1) The FSB provides the notional army brigade with all classes of supplies, heavy maintenance support, medical evacuation, and treatment operations. The FSB also provides limited support to other units located in the brigade AO. The FSB is the single point of contact for support to the brigade and for support operations within the brigade's AO. All FSB units are 100 percent mobile using organic transportation.

(2) The battalion consists of a headquarters and headquarters detachment (HHD), supply company, maintenance company, and medical company as shown in Figure IX-1.

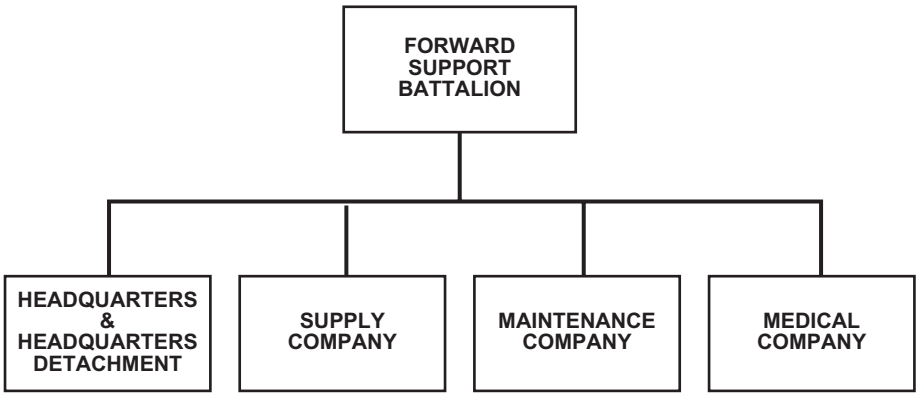

Figure IX-1. Forward Support Battalion

(3) Supply Company. The FSB supply company supports the notional army brigade by receiving, storing, and issuing Class I, II, III, IV (less construction) and Class VII supplies, and by operating an ammunition transfer point (ATP). Table IX-1 identifies the supply company's capabilities and major equipment.

Table IX-1. FSB Supply Company Capabilities/Major Equipment

Class	Short Ton (STON)
Class I	17.7
Class II	16.9
Class III (P)	1.2
Class III (B)	58,600 gal/day store (one-time basis)
	87,500 gal/day issue
Class IV (e)	20.6
Class IV	9.3
Class V	572 transload
Class VII	11.74
Major Equipment	
11	5,000-gal tanker
14	5-ton tractor
8	Fork Lift, Rough Terrain, 6,000-lb
3	Trk, cgo, hvy, palletized load system (PLS), transport w/trailer
18	Bed, cgo, demountable, PLS, 8X20

(a) Maintenance Company. The FSB's maintenance company provides DS maintenance and common repair parts supply support to the notional army brigade's attached and supporting units including all equipment. The maintenance company does not provide the above to medical, COMSEC, airdrop, avionics, aircraft, aircraft armament, and aircraft ammunition maintenance. The company provides tailored tank, mechanized, and artillery maintenance support teams (MSTs) that provide on-site maintenance for the supported task forces and for the artillery and engineer battalions. The company normally maintains a limited authorized stockage list repair parts and provides repairable exchange (RX) of selected items to support the items stocked in combat prescribed load lists (PLLs) of supported units. When required, the company provides backup organizational maintenance to supported units.

(b) Medical Company. The medical company consists of a company headquarters, treatment platoon, and ambulance platoon supported by four HMMWV ambulances, and six M113 armored ambulances. The forward surgical team (FST) is capable of continuous operations with a divisional or non-divisional medical company/troop for up to 72 hours. The FST provides urgent, initial surgery for otherwise non-transportable patients. The FST's surgical capability is based on two operating room (OR) tables with a surgical capacity of 24 OR table hours per day. The company provides Level I and II health service support to all units

operating in the notional army brigade AO on an area basis. The company performs the following functions:

• Treatment of patients with minor diseases and illnesses, triage of mass casualties, initial resuscitation and stabilization, advanced trauma management, and preparation for further evacuation of patients incapable of returning to duty.

• Ground evacuation for patients from battalion aid stations and designated collection points.

• Emergency dental care.

• Emergency medical resupply to units in the brigade area.

• Receipt/issue/storage of 1.6 short ton (STON) of Class VIII supplies.

• Patient holding for up to 40 patients able to return to duty within 72 hours.

b. Notional Army Brigade Logistics Augmentation. Augmentation for the notional army brigade's FSB comes primarily from two sources: the parent division's main support battalion (MSB) and/or a corps support group (CSG). Exact organization and composition is METT-T/METT-TC dependant and is dictated by other division missions the MSB is supporting, host nation (HN) augmentation, and theater contractor support availability. The augmentation is required to provide support that exceeds the capability of both the notional army brigade FSB and the MEF, including back-up DS and GS logistics for the notional army brigade and other supporting Army forces.

c. MSB Augmentation. The MSB of the notional army brigade's parent division provides assets that may deploy with and augment the notional army brigade's FSB. Table IX-2 details the specific types of equipment that may be included in such an augmentation package. For C2 purposes, the package could either be configured into an additional company attached FSB control or the individual sections could be further attached to the FSB's organic companies.

Table IX-2. MSB Augmentation of Notional Army Brigade	
Quantity	**Type Augmentation**
10	5000-gal tankers
10	22.5-ton tractor-trailers
4	4 litter HMMWV ambulances
As Required	MSTs and shop vans to support DS maintenance and Class IX PLL/ASL requirements for- • Aviation equipment • Chemical equipment • Communications equipment • COMSEC equipment • Engineer equipment • TACFIRE/MLRS/fire support control equipment • Night vision devices

d. Other Division Augmentation. The parent division also provides the following augmentation to assist in coordinating and supporting the notional army brigade's administration and logistics requirements:

(1) Section from the division's materiel management center (DMMC) to assist in supply and maintenance management.

(2) Section from the division ammunition office (DAO) to coordinate, control, and manage Class V stocks for the brigade.

(3) Personnel services detachment with functional representatives to perform/assist in replacement operations, casualty management, mortuary affairs, legal services, postal services, and public affairs. Detachment sections collocate with the notional army brigade, CSG(-), as appropriate.

(4) Medical operations cell from the division medical operations center to provide medical support planning, medical evacuation and regulating, and coordinate Class VIII/blood resupply.

(5) Medical field support cell from the MSB's medical company to provide selected Level II health service support including preventive medicine, medical supply, medical equipment maintenance, biomedical equipment maintenance, and combat stress control.

(6) The notional army brigade has no organic financial management support. EAC/Corps units use finance support teams to provide financial management support to a notional army brigade. When financial management structure is needed in theater to support a notional army brigade, it will deploy as part of the early entry module of the deploying force to establish operations in theater prior to

the arrival of the notional army brigade. After initial entry, the notional army brigade may require a tailored financial management structure to perform the required financial management functions. Financial management functions for the notional army brigade include:

(a) Currency and banking support

(b) Cost capturing

(c) Disbursing support

(d) Accounting

(e) Commercial vendor services

(f) Travel and military pay support

(7) CSG(-). The multifunctional CSG(-) provides support to the notional army brigade that exceeds the capabilities of the brigade's FSB, attached MSB slice, and those of the MEF. The CSG(-) collocates with the FSSG and furnishes backup DS and GS logistics functions for the notional army brigade. The CSG(-) also provides the logistics framework for deployment of follow-on Army forces and for the transition back to Army corps control. The theater opening package (TOP) from the theater support command (TSC) early entry module (EEM) normally provides reception, staging and onward movement (RSO) of follow-on forces. The CSG(-) may be subordinate to the TSC EEM if the COSCOM headquarters has not deployed. Because CSGs are tailored to support both non-divisional and divisional requirements, their task organization varies according to METT-T/METT-TC. Figure IX-2 depicts a "*sample*" organization of a CSG(-). A brief recapitulation of the mission, capabilities, and major equipment of the units reflected in Figure IX-2 follows.

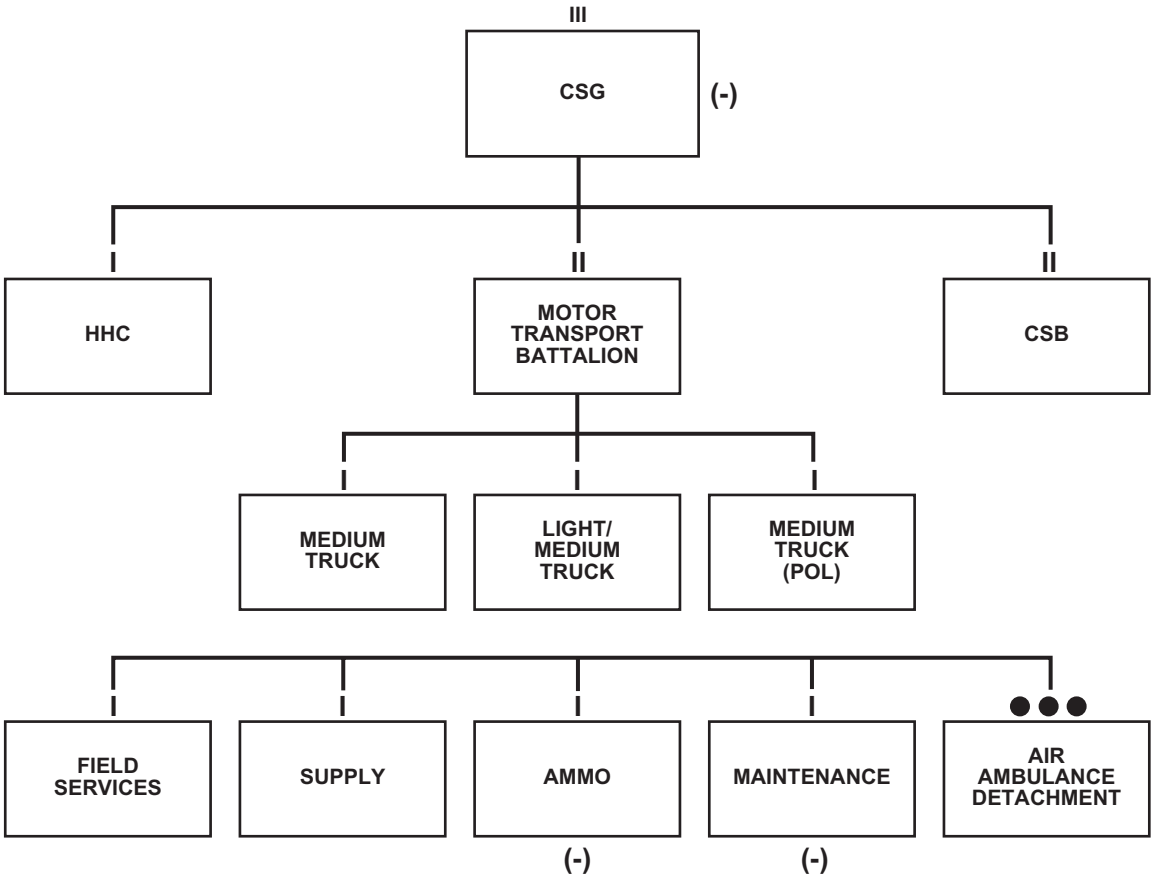

Figure IX-2. Sample Corps Support Group (-)

The text references complete unit tables of organization and equipment. All or any sub elements of these units may be used in developing the tailored CSG (-). Many of these same units would be used as *"building blocks"* to develop a composite logistics organization tailored to augment the capability of the MEB's BSSG when operating with a corps.

(8) HHC. The CSG(-) headquarters provides C2, staff planning, and supervision of three to seven assigned or attached battalions and any separate companies. It exercises technical supervision over mission operations of subordinate units. The headquarters company supports all personnel and equipment assigned and attached to the HHC.

(9) The motor transportation battalion combines movement assets and movement control.

(a) Medium Truck Company. The mission, capabilities and major equipment of a medium truck company are described below.

• Mission. To move supplies and equipment from corps/FSSG supply units/stockage points to users.

• Capabilities. Local haul 2700 STON or line haul 1350 STON daily.

• Major Equipment. 60 x M915 line haul tractors and 120 x M871 22.5-ton semitrailers. The Army is beginning transition to standard truck companies of 72 trucks per company 144 trailers. Each company has three platoons of 24 trucks each.

(b) Light-Medium Truck Company. The mission, capabilities and major equipment of a light-medium truck company are described below.

• Mission. To move personnel and general non containerized cargo.

• Capabilities. Local haul 1200 STON or line haul 600 STON daily.

• Major Equipment. 10 x 5-ton tractors; 25 x 22.5-ton semitrailers; 50 x 5-ton dropside cargo trucks. The Army is beginning transition to standard truck companies of 72 trucks per company. Local 1500 STON, line haul 750 STON. Each company has three platoons of 24 trucks each.

(c) Medium Truck Company (POL). The mission, capabilities and major equipment of a medium truck company (POL) are described below.

• Mission. Wholesale delivery of bulk POL to POL supply units.

• Capabilities. Local haul 900,000 gallons or line haul 450,000 gallons daily.

• Major Equipment. 60 line haul tractors; 60 x 5000-gallon semitrailer tankers. The Army is beginning transition to standard truck companies of 72 trucks per company. 1,200,000-gallon local or 600,000-gallon line haul. Each company has three platoons of 24 trucks each.

(d) Corps Support Battalion (CSB). CSB provides requisite C2 for the companies assigned to the CSG. One CSB consists of primarily transportation units; the CSB is multifunctional in nature.

(e) Field Services Company (DS). The mission, capabilities and major equipment of a field services company (DS) are described below.

• Mission. To provide field services, including laundry, shower, and limited clothing repair operations.

• Capabilities. Can provide laundry service at the rate of 7.9 lbs per person per week and shower service as the tactical situation permits in support of 18,500 personnel.

• Major Equipment. Eight 5-ton cargo trucks and nine 2.5-ton cargo trucks.

(f) Supply Company.

• Mission. To operate a direct support supply facility to support 18,500 personnel.

• Capabilities include—

• Receiving, storing, issuing, and accounting for 168 STON of Class I, II, III (P), IV, and VII supplies.

• Storing 174,000 gallons of bulk POL a day; distributing 84,000 gallons a day at 75 percent availability of dispensing when making two trips per day (line-haul).

• Purifying 60,000 gallons of water at each of three water points; storing 30,000 gallons of potable water, and treating 146,150 gallons of NBC contaminated water.

(g) Corps DS Supply Capabilities are listed in Table IX-3:

Table IX-3. Corps Direct Support (DS) Supply Capabilities

Chapter VI Class	Chapter VII STON
I	65.31
II	33.95
III(P)	5.46
IV	78.63
VII	40.18

• Major Equipment. Table IX-4 details the company's major pieces of equipment.

Table IX-4. Supply Company (DS) Major Equipment

Qty	Type Equipment	Qty	Type Equipment
3	Forward area water supply points	4	Filter separator, 350 gallons per minute (GPM)
12	Semitrailer, Flatbed, 22.5-ton	30	Tank, collapsible, 3000-gal, water
9	Semitrailer, tanker, 5000-gal	6	Tank, trailer, mounted, 600-gal POL
1	10,000 lb forklift, rough terrain	2	Trailer, water, 400-gal
3	4000 lb forklift, rough terrain	17	Trailer, 1.5-ton
4	Truck, tractor, M915	3	Truck, 2.5-ton
5	Tank and pump units, 1200-gal truck	6	Truck, 5-ton, dropsied
4	Tank, collapsible, 3000-gal semi-trailer mounted fabric tank (SMFT)	13	Truck, tractor, 5-ton
4	ROWPU, 3000 GPH	2	FSSP, 60,000-gal
12	Tank, collapsible, 10,000-gal, POL	4	350-GPM pumping assembly

(h) Ammunition Company.

• Mission. To receive, store, warehouse, combat configure, and issue conventional ammunition.

• Capabilities. Establish and operate three ASPs capable of receiving and issuing 560 STON; configure 560 STON of ammunition (total lift capability of 2350 STON) and one ATP capable of re-warehousing 970 STON.

• Major Equipment. Table IX-5 details the ammunition company's major equipment.

Table IX-5. Ammunition Company (DS) Major Equipment

Qty	Type Equipment	Qty	Type Equipment
9	6000 lb forklift, rough terrain	8	10-ton truck, tractor
6	5-ton crane, rough terrain	3	40-ton semitrailer, lowbed
12	Truck, cargo, 5-ton	3	Trailer, palletized loading
5	25-ton semitrailer, lowbed	8	Truck, cargo 2.5-ton
6	Truck cargo, heavy PLS transporter		

Note: The Army is transitioning to modular ammunition companies. Ammunition companies will contain a tailored mix of heavy and medium platoons. These platoons are primarily designed to facilitate the throughput of configured loads to the user. Medium platoons, SRC 09503LA, operate one ASP and 1/3 of an ATP. A heavy platoon, SRC 09503LB, provides storage of 11,363 STONS. The primary difference in equipment is cranes and rough terrain container handlers in the heavy platoon.

(i) Maintenance Company.

• Mission. To provide direct support and backup maintenance and repair parts supply service.

• Capabilities. Table IX-6 describes maintenance company capabilities.

Table IX-6. Maintenance Company (DS) Capabilities

Capability	Capability
Automotive repair	Communications-electronics equipment repair
Computer repair	Engineer equipment repair
Fabric repair	Power generation equipment repair
Small arms repair	Refrigeration repair
Metal working	Special electronics devices repair
Chemical equipment repair	

• Major Equipment. Table IX-7 details maintenance company major equipment.

Table IX-7. Maintenance Company (DS) Major Equipment

Qty	Type Equipment	Qty	Type Equipment
1	Semitrailer, lowbed, 25-ton	14	Truck, cargo, dropside, 2.5-ton
2	Semitrailer, van, repair parts, 6-ton	1	Truck, cargo, dropside, 5-ton
2	Semitrailer, van, ship, 6-ton	18	Truck, tractor, 5-ton
15	Semitrailer, van, supply, 12-ton	1	Truck, van, expansible, 5-ton
1	4000 lb fork lift, rough terrain	5	Truck, van, shop, 2.5-ton
7	Truck, cargo, 2.5-ton	1	Semitrailer, electric repair shop equipment
1	10,000 lb fork lift, rough terrain	4	Truck, contact maintenance
1	Crane, 5-ton, rough terrain	3	Semitrailer, electronic shop
8	Semitrailer, flatbed 22.5-ton		

Note: Force XXI maintenance companies at the Corps level centers around Support Maintenance Companies. These companies are tailored with modular platoons and sections to support their assigned missions.

(j) Air Ambulance Detachment.

• Mission. To evacuate patients to and between medical treatment facilities or to airheads for further evacuation out of theater.

• Capabilities. Provide immediate aeromedical evacuation of all categories of patients, consistent with evacuation priorities and other operational considerations. Operate six air ambulances, each configured to carry four litter patients and one ambulatory patient. Maintain aircraft with organic/attached aviation unit maintenance personnel and equipment.

• Major Equipment. Three UH-60 Blackhawk aircraft.

(k) Other Corps Augmentation. The corps provides the following augmentation to assist in coordinating and supporting the logistics requirements for Army supporting the MEF:

• Split-based section from the corps materiel management center (CMMC) to assist in coordination of supply operations.

• Split-based section from the corps movement control center (CMCC) to coordinate transportation operations.

• Forward support platoon from a corps medical logistics battalion to support medical units with medical supplies and blood support.

5. Notional Army Brigade Logistics Operations

This section describes notional army brigade logistics operations in general terms. Discussions focus primarily on the CSG(-) level and below.

a. Supply. Army units pass supply requests through automated systems from company level through each level of command. Attached units may be added as temporary customers by inputting their Department of Defense Acquisition Code (DODAC).

(1) Class I. During initial deployment, units consume meals ready-to-eat (MRE). As conditions permit, a variety of group rations (A-, B-, and T-rations) augment and modify the initial MRE-only ration cycle. The ultimate objective is to provide soldiers with a minimum of one hot combat (A- or B-ration) per day.

(2) Classes II, III (P), IV, and Maps. Units maintain basic loads of Classes II, III (P) and IV supplies. Resupply of using units occurs through the FSB and CSG(-) supply companies.

(3) Class III Operations. The notional army brigade S4's POL forecasts form the basis for CSG(-) and corps/MEF distribution plans. Using 5000-gallon tankers the CSG(-) pushes fuel directly to the FSB supply company's Class III supply point located in the brigade support area. Battalions draw and transport bulk Class III from the fuel supply point to supported elements using organic assets such as the 12 x 2500-gallon HEMTT fuelers belonging to the tank and mechanized infantry battalions respectively.

(4) Class IV Operations. Class IV consists of fortification, barrier, and other construction material. Construction machinery, equipment, vehicles, and tools used in construction are brought from CONUS. Class IV may be provided through a variety of means including common user provisioning. Class IV materiel is typically in high demand for any type of contingency, including humanitarian assistance/ disaster relief operation where a large requirement often exists for shelters and other buildings. Engineers may also produce their own Class IV, (e.g., sand, aggregate, and concrete). Contractors normally procure their own construction material for projects contracted by the DOD construction agents, (e.g., USACE or naval facility [NAVFAC]). Care must be taken to account for Class IV items used to construct facilities using funds appropriated specifically for construction. Refer to JP 4-04, *Joint Doctrine for Civil Engineering* and JP3-34, *Engineering Doctrine in Joint Operations* for further information on Class IV. Although Class IV is a supply function, at the brigade level, most requirements will be in the combat engineer category, which is covered in more detail in Chapter VI, *Engineering*.

(5) Class V Operations. Ammunition supply of all types is based on a required supply rate (RSR) and a CSR. Availability drives the CSR. Based on command guidance, the CSR provides the basis for Class V distribution to using units. The CSG(-) pushes ammunition from the joint theater storage area (JTSA) or corps storage area (CSA) to an ASP located in the rear of the AO or directly to the ATP located in the BSA. The FSB manages the ATP. Combat units use organic assets

such as the tank battalion's ammunition trucks to draw and transport Class V from the ATP to the users.

(6) Class VI materiel. Class VI supplies consist of health and comfort packages and female sundry packages. Health and comfort packages contain toothbrushes, toothpaste, razors, and personal demand items. Female sundry packages contain additional health and comfort items. Since Class VI is not service specific, it is highly appropriate for common user logistics. The key to successful Class VI support is proper coordination for the introduction of military exchange activities into the theater as operation conditions permit. Class VI materiel is procured and managed by the various service exchange systems (AAFES, NEXCOM and the MCX), and MWR organizations. Most of these items are procured outside of the defense and service supply systems, and once sold or issued to the individual service member, cease to be accounted as government property.

(7) Class VII. Class VII resupply to using units is based on battle loss reports and priorities established by commanders. The CSG(-) delivers equipment to the FSB supply company or directly to users at the battalion level.

(8) Class VIII (Medical) Resupply. The CSG(-) transports medical supplies to the FSB medical company. The medical company further distributes using support medical elements. Ground and air ambulances achieve emergency resupply of Class VIII materials via backhaul.

(9) Class IX. See maintenance discussion below.

b. Maintenance.

(1) Ground Systems Maintenance. Maintenance support occurs as far forward as possible. The FSB provides dedicated DS maintenance support to notional army brigade units and area support to other units. The FSB maintenance company provides a MST to each maneuver battalion, as well as to the DS artillery and engineer battalions. US Army DS maintenance is roughly equivalent to USMC intermediate maintenance. The company also maintains a limited stockage of authorized stockage list (ASL) repair parts to augment the limited combat PLL of repair parts maintained by supported battalions. The CSG(-) provides backup automotive and missile maintenance support to unit MSTs. Repair parts not available through the CSG(-) or FSSG are generally flown into theater from CONUS depots via air lines of communications (ALOC) to the CSG(-) for further distribution to the FSB and supported units.

(2) Aviation Maintenance.

(a) The Army aviation maintenance system focuses on ensuring maximum availability of mission-capable aircraft. Maintenance support occurs in three levels: AVUM, AVIM, and depot maintenance. Each aviation element owns an organic AVUM capability backed up by higher echelon AVIM units.

(b) Air Ambulance Detachment Maintenance. Aviation maintenance for the air ambulance detachment is accomplished primarily by the AVUM personnel organic to the aeromedical unit. A slice of AVIM personnel from the corps AVIM will accompany that unit and provide backup and limited AVIM support to AVUM personnel. The maintenance capability consists of battle damage assessment and repair, contact maintenance, and line replaceable unit/module replacement. Phase maintenance on aircraft is normally not possible until a more robust aviation maintenance capability exists, such as the aviation augmentation packages described in Chapter VII.

c. Health Service Support. Medical units organic to maneuver battalions provide Level I medical support to units in the forward areas. The FSB medical company provides Level II support to the notional army brigade and Level I support to units without organic medical assets; it also provides backup Level I support and ground evacuation support to the battalions. The air ambulance detachment (which may be attached to and collocated with the notional army brigade medical company) provides an aeromedical evacuation capability as described earlier.

d. Transportation. The FSB has no assigned DS transportation assets. The notional army brigade requests external transportation support through the movement control cell of its higher headquarters. The movement control cell requests assistance from the MEF FSSG when requirements exceed CSG capabilities.

e. Services. The notional army brigade has no organic laundry or bath capability, water assets, or graves registration capabilities; it depends on the water teams from the MSB and CSG(-) and MEF for all other field services support.

(1) Field Services. The CSG(-) field services company, augmented with a mortuary affairs collection section, provides laundry and shower support and mortuary affairs support respectively for the brigade.

(2) Water Production Storage and Distribution. The CSG(-) supply company supplies the FSB with water. The FSB may also receive a water team from its supporting divisional MSB. However, FSBs do not have bulk potable water production and delivery capabilities.

f. General Engineering. The notional army brigade's combat engineer battalion's capability to perform general engineering tasks is extremely limited. External support is required for any significant general engineering tasks including facilities development and repair.

6. MEF Logistics Organizations

The FSSG provides logistics support for the MEF. The FSSG performs those functions that exceed the organic capabilities of the supported units. The FSSG commander, normally a brigadier general, serves as the principal logistics advisor to the MEF commander. The FSSG consists of the FSSG headquarters plus seven permanent battalions. These battalions include a headquarters and service

battalion, a supply battalion, a maintenance battalion, a transport support battalion, an engineer support battalion, a medical battalion, and a dental battalion. Based on the mission, the commander task organizes these battalions into CSSEs. Table IX-8 provides relative sizes of MEF CSSE and Army CSS units for a rough capability comparison. Because CSSEs below the FSSG are task organized, the size and capability will vary with the mission.

Table IX-8. Combat Service Support Organizations

Unit	Service	Commanded by:	Approximate Personnel Strength	Habitual Unit Supported
Corps Support Command	US Army	MG	10,000 to 14,000	Corps
Force Combat Service Support Group (FSSG)	USMC	BGen	8,000 to 10,000	MEF
Division Support Command	US Army	COL	2,000 to 3,000	Division
Brigade (Combat) Service Support Group (BSSG (CSSG))	USMC	Col	1,000 to 2,500	MEB (RLT & MAG)
Main Support Battalion (MSB)	US Army	LTC	1,000	Bde
MEU Service Support Group (MSSG)	USMC	LtCol	250 to 340	MEU (SOC)
Forward Support Battalion (FSB)	US Army	LTC	200 to 270	Bde
Combat Service Support Detachment (CSSD)/ Mobile (MCSSD)	USMC	LtCol-Capt	100 to 800	Regt, BLT, or squadron

a. BSSG. The CSSE of a MEB, a BSSG, derives from the MEF's FSSG. The notional BSSG depicted in Figure IX-3 consists of a detachment from each battalion in the FSSG and organization is based on mission.

(1) Headquarters and Service (H&S) Company. The H&S company provides C2, administration, communications, and ADP to the BSSG. It provides supporting services to the MEB in the amphibious assault and subsequent operations ashore, to include such services as GS data processing, disbursing, postal, exchange service, military police, information systems, legal service support, civil affairs support, graves registration, and limited communications support.

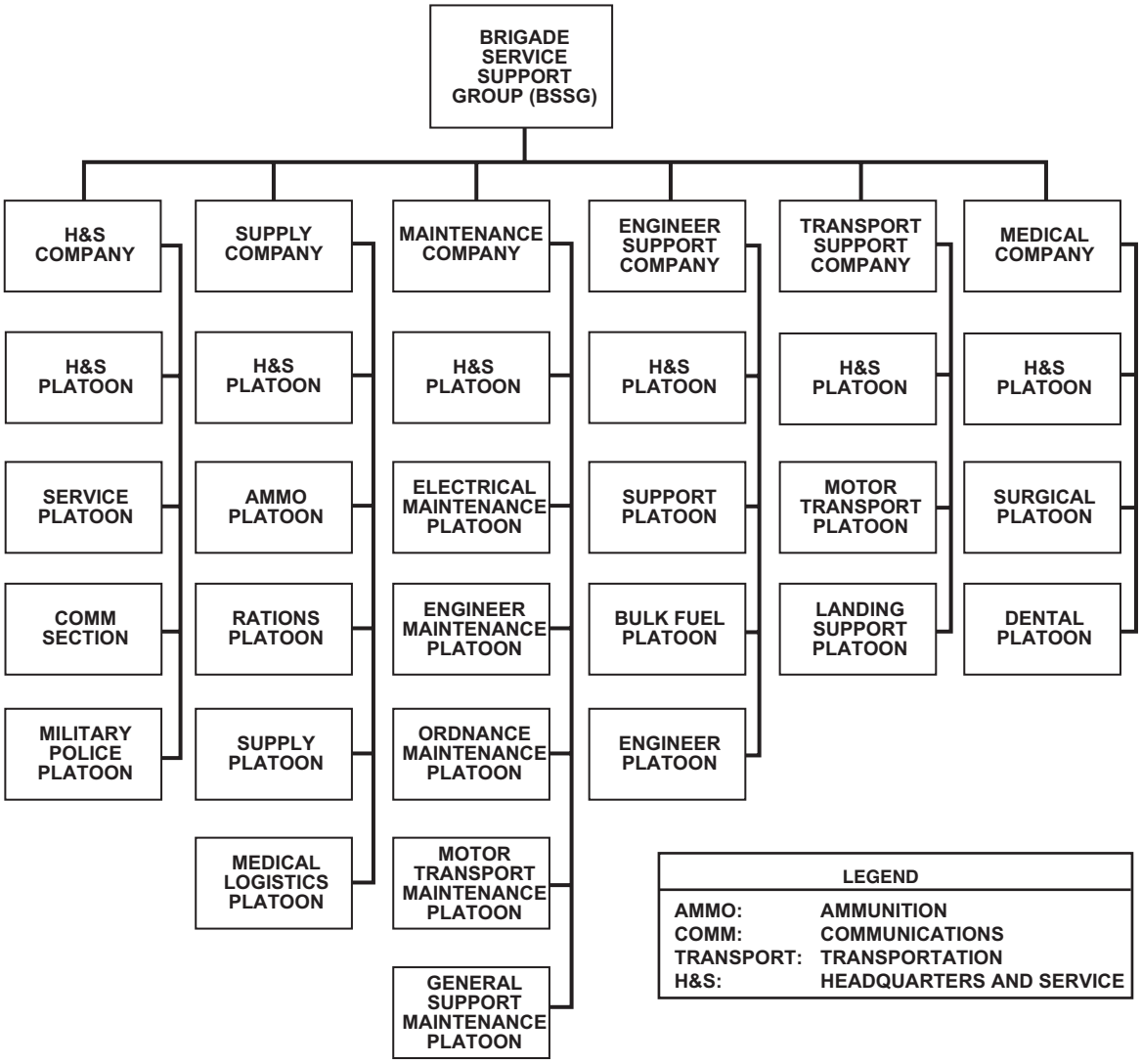

Figure IX-3. Notional Brigade Service Support Group

(2) Material Platoon. The material platoon is responsible for stock control, cross servicing, and civilian contracting for all classes of supply except bulk fuel, and aviation/aircraft related supply support. This support includes receiving, storing, assembling, inspecting and issuing ordnance, parts, equipment and repairable items to ground elements, and providing medical supply support and intermediate level maintenance on all medical and dental equipment of the MEB.

(3) Transportation Support Company (reinforced). The transportation support company (reinforced) provides medium and heavy motor transport support, augmenting GCE and ACE organic capabilities on a mission-type basis.

(4) Engineer Support Company. The engineer support company furnishes general organic engineering support, including bulk potable water production and storage, horizontal and vertical construction fortification, construction, repair and

maintenance of aviation facilities, facilities maintenance, engineer reconnaissance, and deliberate demolition and obstacle removal. See Chapter VIII for detailed discussions.

(5) Medical Company. The medical company, staffed with USN medical personnel, provides Level II care including casualty collection, emergency treatment, temporary hospitalization, specialized surgery, and evacuation support for the MEB.

(6) Landing Support Platoon. The landing support platoon provides landing support to the MEB and subordinate elements in the assault and subsequent operations ashore. The landing support consists of communications, materials handling equipment, helicopter support, beach and terminal port operations, and the establishment of temporary storage areas on the beach.

b. ACE Logistics Support. The MEB's ACE logistics organizations include Marine aviation logistics squadrons (MALS) for aviation logistics support and MWSS for ground logistics support as illustrated in Figure IX-4. Each MAG is supported by a MALS and MWSS. A MEB will have a composite MAG with both fixed and rotary wing assets. Ordinarily, a rotary wing MALS and MWSS augmented with fixed wing MALS and MWSS support assets will be assigned to the composite MAG. If the ACE has two full MAGs, as depicted in Figure IX-4, a Marine wing support group (MWSG) headquarter element with two MWSSs will be assigned. Organizational functions are addressed within the context of the six logistics functions discussed below. The MWSS provides ground CSS similar to BSSGs with additional airfield operations support including: aircraft recovery services, expeditionary airfield (EAF) installation and operation capabilities, weather forecasting, and aircraft rescue and firefighting including structural firefighting capability. Though not part of the ACE, a CSSD from the BSSG is usually in direct support of logistics operations at a given air facility. They provide ground logistics support not organic to the MWSS such as postal, disbursing, exchange services, 3rd echelon maintenance, dental services, and Class IX support.

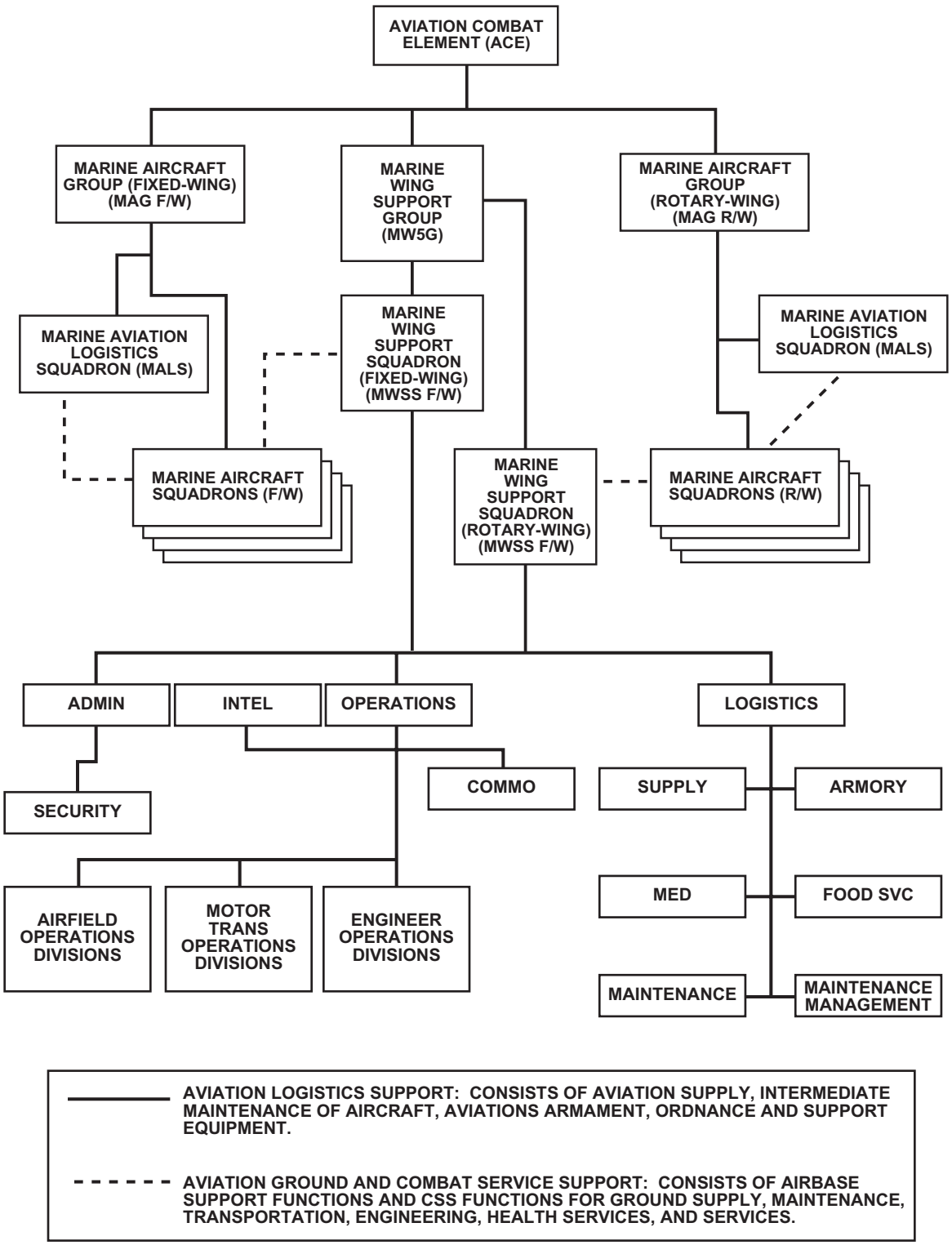

Figure IX-4. Aviation Combat Element Logistics Organization

7. MEB Logistics Operations

MEB logistics operations occur in general terms as described below:

a. Supply. MEB sustainment is achieved through a mixture of assault echelon (AE) accompanying supplies and assault follow on echelon (AFOE) replenishment. AE supplies are an integral part of the MEB logistics load in virtually all situations. The minimum baseline for a MEB AE supplies is 30 days. The availability of aviation ordnance, ground material, and bulk POL fluctuates and is theater-dependent. Resupply begins with force employment. It is scheduled to commence before expending of accompanying supplies and to continue through the entire period as established by the supported theater combatant commander's guidance. Accompanying supplies are a combination of supplies aboard maritime pre-positioning ships (MPS), supplies accompanying the amphibious forces, and additional items shipped from CONUS or key locations around the world. The Marine Corps logistics system is designed to support most general MEB requirements from on-hand supplies through the BSSG. The naval supply system provides aviation-peculiar support through MALS. In a mature theater, subsistence and POL replenishment of AE supplies will be requisitioned through the Defense Logistic Agency (DLA) or common user logistics (CUL) theater executive agents. Theater ground ammunition assets are stored in Army or Navy ammunition depots; air ordnance resides in Navy depots before issue. External support may be provided to meet MEB requirements. HN support, theater support contracting, and inter-service support agreements may also be established.

b. Maintenance. MEB maintenance is conducted at the organizational and intermediate levels only. Depot-level maintenance is conducted at USMC logistics bases in the CONUS. USMC intermediate maintenance is roughly equivalent to DS maintenance.

(1) Organizational and intermediate ground maintenance is performed as far forward as possible. During combat operations, ground force maintenance focuses on battle damage repair, salvage, removal/replacement of critical repair parts, and performance of essential preventive maintenance. Organizational maintenance is conducted by equipment operators and trained maintenance personnel. Intermediate ground maintenance is conducted by the BSSG. This is normally accomplished by sending repair teams to conduct on-site repairs or evacuating equipment that cannot be repaired in place.

(2) Aviation Maintenance. To support the task-organized ACE aircraft, the USMC uses the Marine Corps Aviation Logistics Support Program (MALSP). The MALSP enables the individual identification of personnel, equipment, and parts required to support each type, model, or series of fixed-wing and rotary-winged aircraft in the ACE. The personnel are assigned, as required, to the fixed-wing or rotary-wing MALS to support MAGTF-assigned aircraft squadrons. The supporting equipment and parts are tailored into support packages. The first of these, the fly-in support package (FISP), accompanies the aircraft fly-in echelon. The FISP contains organizational-level maintenance support. The second package is the contingency support package (CSP). The CSP contains appropriate intermediate-level

maintenance support. When the MEB is initially supported by a maritime prepositioning ship squadron (MPSRON), the ACE receives support from an aviation logistics support ship (TAVB). In this case, a small organizational-level FISP will be constituted to support organizational maintenance until arrival of the TAVB and MPSRON.

c. Health service support. USMC health service support is similar to that of the Army. Level I care occurs at battalion level. The medical company at the BSSG provides Level II care. Combat zone fleet hospitals and hospital ships based at the FSSG or offshore furnish Level III care. Level IV care capabilities exist at the communications zone fleet hospital. MEB health service functions include health maintenance, casualty collection and treatment, temporary hospitalization, and casualty evacuation. The Navy provides all MEB medical and dental personnel. Medical personnel are organic to all combat and combat support units of battalion/ squadron size or larger. Medical material support is provided by the BSSG. Medical capabilities and evacuation facilities are concentrated in combat organizations, especially infantry, where most combat casualties are expected. Each combat and combat support battalion has the organic Navy medical personnel and capability to establish one or more aid stations. For example, an infantry battalion has up to two doctors and 65 Navy corpsmen. Within the ACE, the MWSSs have organic medical personnel and equipment needed to establish an airfield aid station. In addition, each squadron has a flight surgeon assigned. Tailored medical support in the MWSS provides laboratory, x-ray, and pharmacy support. The BSSG provides medical and dental coordination, direct support, administration, and maintenance to the MEB. The BSSG detachment coordinates medical and dental requirements planning and provides limited casualty collection, surgical support, hospitalization, medical evacuation, x-ray, laboratory, pharmacy, and blood bank support. Medical unit functions also include preventive medicine and identification of human remains. The BSSG medical logistics unit provides Class VIII supply and intermediate maintenance support.

d. Transportation. MEB organic transportation support consists of ground and air transportation assets as described below. The BSSG commander normally exercises responsibility for MEB movement control.

(1) GCE/ACE Motor Transport. Motor transport assets within the GCE and ACE are limited. Motor transport for both elements above their organic capabilities are provided by the BSSG as GS to the MEB. Organic GCE motor transport is limited and employed primarily for organic tactical mobility. Organic motor transport for the ACE is provided by the MWSS positioned at each airfield. All organic ground transportation assets within the GCE and ACE may be consolidated to provide transport to the MEB when not used for tactical mobility.

(2) BSSG Assets. BSSG ground transportation assets are used to link ports, supply centers, terminals, and other CSS facilities. They are also used to augment organic GCE and ACE capabilities. General-use BSSG assets may include 5-ton trucks and logistics vehicle system (LVS) vehicles.

(3) Air Transport. An ACE normally contains significant helicopter assets that can conduct equipment, cargo, and personnel movement operations. The ACE KC-130 may also provide limited intratheater air transportation; however, its primary role is an air-to-air refueler. See Chapter VII for additional discussion.

(4) Landing Support Operations. Landing support operations include beach and port terminal operations, air delivery support, helicopter support teams, departure/arrival airfield, and rail operations. Navy augmentation to the landing support organizations facilitates the ship-to-shore assault movements from amphibious ships to locations ashore.

(5) Embarkation. Embarkation is the process of putting personnel or vehicles and their associated stores and equipment into ships or aircraft. Embarkation is an extremely important planning requirement. Embarkation and movement in a theater of operations is accomplished with amphibious ships, strategic sealift, and strategic airlift. See JP 3-02.2, *Joint Doctrine for Amphibious Embarkation Operations*, for additional details.

e. Services. Services include the functions of postal operations, finance, law enforcement, enemy prisoner of war management, information systems management, legal services support, civil affairs, and graves registration. For field services support that exceeds the capabilities of MEB assets (e.g., enemy prisoner of war holding, civil affairs support, or graves registration requirements that exceed MEB capabilities), the MEB requires augmentation by Army assets.

f. General Engineering. In addition to providing the MEB with mobility support, the BSSG engineer support unit capabilities include camp construction and maintenance; electrical power supply and distribution; construction design; bulk fuel reception, storage, and issue; potable water production and storage; and explosive ordnance disposal. Chapter VI discusses engineer operations in detail.

8. Integrated Logistics

Topical discussions on integrated logistics operations include C2 of logistics operations; detailed applications of the six logistics functions during notional army brigade and MEB cross service operations; and logistics reporting procedures.

a. C2 of Logistics Operations.

(1) Notional Army Brigade Under MEF Control. The CSG(-) would normally be placed OPCON to the MEF FSSG. This command relationship allows C2 of the CSG(-) by the senior logistician (MEF FSSG) and requires the MEF to provide security and terrain management. Figure IX-5 depicts the C2 logistics when the notional army brigade operates under the control of the MEF.

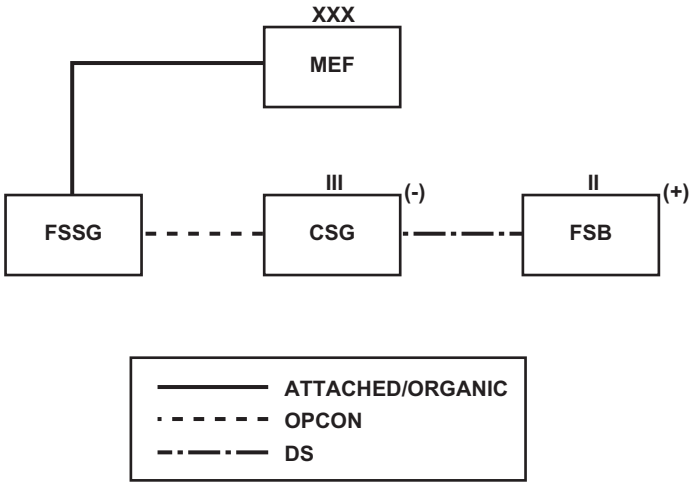

Figure IX-5. Logistics C2 Notional Army Brigade Under MEF

(2) MEB Under Corps Control.

(a) Army Common User Logistic Support to the MEB. With the exception of selected Class II, V (primarily aviation), VII, and IX supplies and maintenance requirements peculiar to USMC equipment, the Army can provide the majority of logistics support required by the MEB that exceeds the capability of the BSSG. Figure IX-6 depicts a notional CSB constituted to provide that support. For example, the CSB would be task organized with additional Class III and Class V capabilities to support a field artillery brigade placed in support of the MEB.

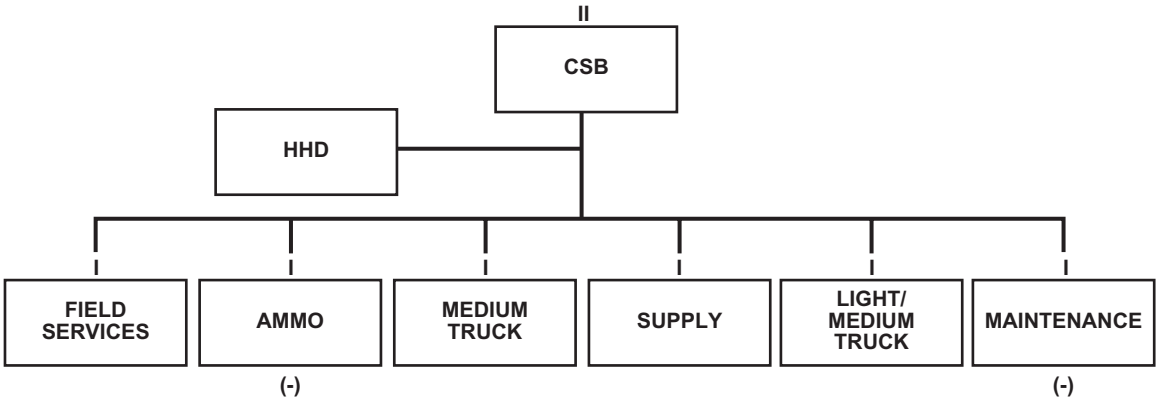

Figure IX-6. Notional Combat Support Battalion in Support of a MEB

(b) C2. Figure IX-7 reflects the C2 relationship of logistics elements when the MEB operates as part of a corps.

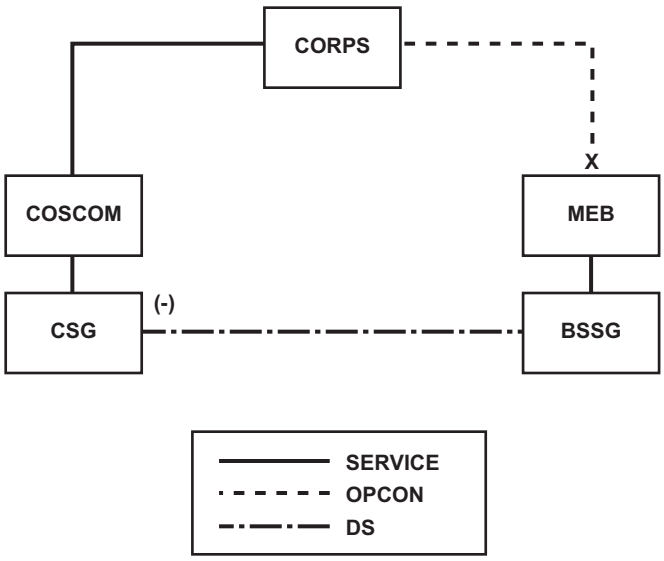

Figure IX-7. MEB Logistics C2 Under Corps Control

(3) Liaison. A logistics liaison team should be provided to the new controlling headquarters. The team coordinates support and ensures information flow between the unit and the controlling headquarters. At minimum, the following information must be provided:

(a) Critical fuel and ammunition requirements.

(b) Status of each class of supply including water.

(c) Maintenance requirements and backlog.

(d) Class IV, V, and IX requirements and availability.

(e) Movement requirements and available transportation assets including aircraft.

(f) Availability of medical treatment and evacuation assets.

(g) Locations of support elements.

(h) Status of support personnel.

(i) Anticipated support problems.

(j) Compatibility of automated equipment.

(k) Unique equipment.

(4) C4I Support . C4I support planning must consider and accommodate logistics requirements in order to synchronize and fully support operational

execution. Similarly, C4I contingency plans define backup automated and manual capabilities that ensure uninterrupted logistical support of ongoing operations.

b. Supply Operations. Army and USMC units pass supply requests through automated systems from company level through each level of command. Attached units may be added as temporary customers by inputting their DODAC. Any item that has a national stock number (NSN) may be ordered through normal service channels. A memorandum of understanding (MOU) and supporting agreements and fiscal instruments/documentation should be completed, if possible, to ensure supported-supporting responsibilities are clearly defined and to effect financial reimbursements as required.

Note: While standard supply systems can pass non-habitual customers requisitions, funding issues may cause this technique to be impractical and very problematic. Unit logistic planners must ensure that these types of issues are identified and details worked out early in the planning process.

(1) Class I.

(a) Notional Army Brigade Under MEF Control. During the initial phase of an operation, rations are pushed forward based on personnel strength, unit locations, type of operations, and feeding capabilities of supported units. As the situation permits, Class I support transitions from a *"push"* system to a *"pull"* system. Units submit requisitions to the FSB's forward Class I supply point where all requests are consolidated and submitted to the supporting materiel management center Class I section at the CSG(-). From there, requests flow to the MEF FSSG. The FSSG throughputs the requested rations to the FSB's ration breakdown point located in the BSA. At the BSA, rations are broken down for issue to requesting units. Requesting units use organic transportation to move rations from the BSA to forward units.

(b) MEB Under Corps Control. Until a decision is made to transition to a pull resupply system, rations are pushed to the MEB based on the considerations described above. Once the transition occurs, the MEB sends consolidated ration requests to the supporting CMMC Class I section for further transmission to the COSCOM. Corps units deliver rations to the CSSE for breakdown and further distribution to supported units.

(2) Class II, III (P), and IV

(a) Notional Army Brigade Under MEF Control. Supply requests flow electronically from the requesting unit through supply channels to the CSG(-) supply company. Common items requests are manually passed to the supporting CSSD. If a requested item is available, the CSSD transports it to the user through unit distribution when possible; otherwise supply point distribution may be required. If the item is not on hand, the CSSD passes the requisitions to the FSSG for further processing. Again, fiscal arrangements must be in place to facilitate inter-service support transactions. Once the requisition is filled, the FSSG normally provides the transportation to deliver supplies and equipment to the subordinate CSSD. Surface

transportation is the norm but high priority supplies may be delivered by air to the user based on asset availability. Service-unique supplies are processed through the split-based CMMC at the CSG(-).

(b) MEB Under Corps Control. User supply requests flow to the BSSG supply platoon at the MEB level. The supply platoon passes requests it cannot fill to the CSB supply company, which fills the request or passes it to the CMMC. The CMMC fills the request or passes it to the Army Theater Support Command Material Management Center for procurement through a national inventory control point (NICP). Corps units' throughput supplies to the BSSG for further distribution to supported units.

(3) Class III.

(a) Petroleum operations are particularly difficult to orchestrate in a joint operational setting. The POL considerations listed below must be taken into account:

• Forecasting requirements and establishing an adequate storage and distribution system.

• Monitoring consumption and submitting requirements for bulk fuels and packaged products.

• Defining responsibility for storage and land distribution of POL; operations and maintenance of pipelines and related facilities when required; packaging of bulk fuels; and provision of petroleum laboratory facilities for quality control in support of all forces deployed.

• Planning for augmentation by commercial bulk POL distribution capability, transportation assets, and collapsible tanks and containers.

• Establishing aerial resupply in support of operations until surface resupply can be established.

(4) Notional Army Brigade Under MEF Control. While the FSSG has 4.8 million gallon III bulk storage capacity, the FSSG does not have the capability to transport or distribute the amount of Class III that the notional army brigade will consume. During operations, a tank battalion requires tactical refueling approximately every six hours. Table IX-9 provides some expected consumption rates for the notional army brigade and MEB ground equipment during different types of operations. The table does not include the 1.04 million gallons per day consumed by the MAW in the MEF. Figures are for illustration purposes only; many factors affect actual consumption rates. At the seaport of debarkation (SPOD), an Army tactical petroleum terminal (TPT) element off-loads bulk fuel from ships. Fuel that exceeds naval storage capabilities can be stored by a corps petroleum supply company with a storage capacity of some 2.5 million gallons. The CSG(-)'s medium truck company (POL) transports bulk fuel directly to the FSB.

Table IX-9. Illustrative Class III Consumption Rates			
Unit	**Offense**	**Defense**	**Reserve**
Notional Army Brigade	160,000	150,000	50,000
MEB	65,000	44,000	20,000

(a) MEB Under Corps Control. The BSSG may establish a rearm/refuel point (RRP) to support a mechanized or other rapidly moving force. The corps pushes fuel from the COSCOM to designated RRPs, where combat units draw and transport Class III support forward to their units using organic assets.

(5) Class V (Ammunition) Operations. There is a significant difference between Army and USMC combat ammunition logistics support doctrine. Because of the large quantities of Class V munitions consumed during combat operations, Army units employ the Palletized Loading System (PLS) for resupply operations. The PLS is the centerpiece of a transportation-intensive, continuous throughput system. Limited forward stocking of Class V occurs. USMC logistics doctrine places considerably more emphasis on stocks uploaded on organic vehicles in the combat force and less emphasis on a structured distribution system.

(a) Notional Army Brigade Under MEF Control. The configuration of stocks arriving in the AO determines the requirements for handling and transloading stocks. Army transportation units deliver stocks from the SPOD to the JTSA. Shipment from the storage area to forward ASPs or directly to the notional army brigade ATP may be effected by PLS vehicles carrying combat-configured Class V loads or by conventional cargo transporters and trucks.

(b) MEB Under Corps Control. Resupply of combat units is achieved through the CSSD. The corps pushes Class V to the RRP established by the CSSD. Supported units transport ammunition from the RRP using their organic transportation assets.

(6) Class VII. Class VII is not suitable for common user support and is conducted with service policy and procedures. Transportation for Class VII is accomplished with common user procedures per discussion found later in this chapter.

(7) Class VIII.

(a) Notional Army Brigade Under MEF Control. A medical logistics distribution team from the forward support platoon of the medical logistics battalion provides Class VIII medical resupply to the notional army brigade medical company and to the medical units at echelons above brigade. The CSG(-) supports the team with transportation support for Class VIII. The team coordinates with the BSSG

supply detachment (medical logistics element) battalion on all medical supply matters.

(b) MEB Under Corps Control. The corps medical logistics battalion supports the medical resupply needs requested from the BSSG supply platoon (medical logistics element).

(8) Class IX.

(a) Notional Army Brigade Under MEF Control. Class IX support between Army and USMC units will normally be limited to common Code 9 DLA items, and depending on other operational constraints, may be restricted to a "fill or kill" basis. Fiscal arrangements need to be in place to support inter-service requisition of repair parts. Class IX requests that cannot be satisfied from PLL or ASL stocks and stock replenishment requests flow through maintenance channels to the maintenance battalion at the CSG(-). Any item that has an NSN may be ordered through normal service channels. If the repair part is a common service item, the request goes to the MEF FSSG supply system for further processing. The FSSG obtains required repair parts and delivers them to the CSG(-). The CSG(-) delivers the parts to the FSB maintenance company for subsequent pickup by requesting units. If the repair part is an Army-peculiar item, the CMMC passes the request directly to the NICP for processing. Parts typically arrive via ALOCs for reception and processing by the FSSG, CSG(-), and/or the FSB. Army automation systems forward requests not locally filled to national sources. Critical items are usually delivered through air lines of communications.

(b) MEB Under Corps Control. Again, Class IX support between Army and USMC units will normally be limited to common Code 9 DLA items, and depending on other operational constraints, may be restricted to a "fill or kill" basis. Requests for repair parts from using units flow to the maintenance detachment located at the MEB's BSSG. Further processing of common item requests occurs through the CSB's maintenance battalion. The CSB delivers repair parts to the BSSG for further distribution to using units. Requests for service-unique repair parts flow from the CSB through corps to the Marine Corps Unified Materiel Management System.

(9) Class X. Materials to support nonmilitary programs are requested and obtained through supply channels on an as-needed basis based on civil-military requirements articulated through command guidance.

(a) Maintenance Operations. Commanders exercise responsibility for coordination of maintenance within their commands. Maintenance priorities must focus on mission-essential weapon systems that can be rapidly returned to combat readiness. Whenever practical, maintenance facilities for joint or cross service use should be established, and interservice use of salvage assets should be emphasized. Back-up maintenance support for common items may be provided from one service component maintenance organization to another, but normally this type of common servicing support is used in emergency or exceptional basis only. Service-peculiar items that require maintenance support remain the responsibility of service component commanders.

• Notional Army Brigade Under MEF Control. As described earlier, maintenance support teams provide on-site maintenance to notional army brigade units. Backup automotive and missile support maintenance occurs at the FSB. If required, equipment is evacuated to the CSG(-) for repair or other disposition. The FSSG also provides backup maintenance support on common items.

• MEB Under Corps Control. Intermediate-level maintenance support is performed by the CSSDs or evacuated back to BSSG. Support includes repair of subassemblies, assemblies, and major end items for return to lower echelons or supply channels. Maintenance requirements for common equipment that exceed the capability of the maintenance detachment are supported by the CSB(-). Requirements for USMC-peculiar equipment that cannot be supported by the detachment CSB(-) or corps must either be evacuated and/or replaced through Class VII resupply.

• Health service support. Planning Medical Service Support. Medical support planning addresses how the operation is medically supported to assist in achieving the overall mission. Medical planning must take into account the following considerations:

(b) Evaluating each service component's medical capability and deployable medical systems (DEPMEDS).

(c) Providing, where practical, for joint use of available medical assets to support operational execution.

(d) Selecting appropriate sites for field hospitals that facilitate timely care and support, provide appropriate protection, and support battlespace management.

(e) Evaluating transportation assigned and available to recover, move, and evacuate wounded personnel; planning interservice evacuation procedures, including air movement to hospitals afloat.

(f) Projecting and providing for the amounts of medical supplies and blood required to sustain committed units.

(g) Evaluating NBC decontamination capability for patients and chemical protective facilities.

(h) Treating of EPW, civilian internees, and detainees.

(i) Providing medical support for combat search and rescue (CSAR) operations.

(j) Ensuring effective medical supply and resupply operations in general and blood support and resupply in particular.

(k) Providing dental services.

(l) Establishing a senior medical regulating officer to coordinate the actions necessary for the movement of patients and tracking of patients and available beds above Level II treatment facilities.

(10) Notional Army Brigade Under MEF Control. Casualties requiring treatment beyond that provided at notional army brigade Level II are evacuated to Level III combat zone fleet hospitals or hospital ships or Level IV theater hospitals as determined by the MEF medical regulating officer.

(11) MEB Under Corps Control. When applicable, health service support to the Marine units will be provided by the MEB's organic Levels II and III organizations. Any cases that cannot be properly handled by the MEB medical units will be evacuated to the corps' Level III facilities or the Level IV theater hospital if so ordered by the corps' medical regulating officer.

c. Transportation Operations and Movement Control.

(1) Transportation considerations include but are not limited to the following functions:

(a) Emergency movement of forces into combat.

(b) Emergency resupply of ammunition, fuel, water and food to forces in combat.

(c) Movement of emergency medical supplies.

(d) Emergency evacuation of casualties.

(e) Programmed routine re-supply to combat operations.

(f) Evacuation of EPW and civilians.

(g) Recovery and salvage of damaged or destroyed weapon systems.

(2) Notional Army Brigade Under MEF Control. The CSG(-) has a substantive capability for supporting transportation requirements that exceed notional army brigade organic assets. Requests for USMC air transportation support flow through channels described in Chapter VII.

(3) MEB Under Corps Control. Requests for transportation support flow to the transport support company located at the BSSG. Task-organized assets support mobility and transportation requirements as required in the priority established by the MEB commander. The BSSG passes requests that exceed the capability of available assets to the supporting CSB. The CSB commits assets from attached truck companies as required to support prioritized requirements.

d. Services. Services for both the notional army brigade and MEB will be provided on a support basis.

e. General Engineering.

(1) Regarding general engineering operations, service components include the following functions:

(a) Identifying civil engineering support requirements to support assigned forces.

(b) Providing resources for completion of civil engineering support programs.

(c) Negotiating contract construction for all services if designated as construction agent for the geographic area concerned.

(d) Using standard Service Department planning factors unless otherwise directed.

(e) Providing or coordinating logistics for the maintenance and repair of facilities, utilities, and routes as assigned by the JFC.

(f) Assuming responsibility for maintenance and repair of facilities and infrastructure in a geographic area where it has exclusive operational interest.

(g) Maintaining external and access routes and utilities required by all services when the command-wide distribution system or network is operated by that service component.

(2) Notional Army Brigade Under MEF Control. The brigade's extremely limited general engineering capability requires augmentation by Army corps engineer units, the MEF's subordinate engineer units, or OPCON Navy mobile construction battalion(s) to perform required general engineering tasks. Support is provided on a mission basis or by designating a support relationship as described in Chapter VI between the supporting unit and the notional army brigade.

(3) MEB Under Corps Control. When required, a corps provides the MEB with engineer support from the corps engineer brigade. Such support ranges in scope from single specialized company-sized units to multifunctional engineer groups comprised of two or more engineer battalions. As described above, support is provided on a mission-specific basis or is formalized through the establishment of command relationships.

9. Logistics Status Reporting

Logistics status reports provide the JFC critical input for making decisions in a dynamic operational setting. Functional logistics areas where recurring or special reporting requirements are detailed include the following information:

(1) Status of deployment, closure reports.

(2) Personnel summary reports.

(3) Logistics status reports for all classes of supply and for selected, critical commodities.

(4) Projected resource requirements for probable execution of selected contingency options.

(5) Materiel readiness status of weapons systems, vehicles, and equipment.

(6) Status of critical transportation assets.

(7) Medical status of the force.

(8) Status of JOA infrastructure.

(9) Status of support of civil-military operations.

Additional guidance on standardized logistics reporting will be provided through emerging joint doctrine and joint tactics, techniques, and procedures associated with the global C2 system.

Appendix A

UNITED STATES ARMY CORPS

1. Background

A corps is the largest tactical unit in the Army — the instrument by which higher echelons of command conduct maneuver at the operational level. While a corps can deploy as an independent unit, such employment would be limited in both scope and duration. Normally, a corps will function under the control of higher echelons (such as field armies and army groups in developed theaters), as land components of a unified or subunified command, or as the Army element of a JTF. As such, a corps plays a key role in translating the broad strategic and operational objectives of higher echelons into the specific and detailed tactics used to achieve those objectives.

2. Corps Structure

The US Army tailors corps for the theater and mission for which they are deployed. There is no standard organizational structure of a corps. The following discussion highlights types of combat, CS, and CSS organizations that may comprise a corps. Figure A-1 outlines a notional corps organization.

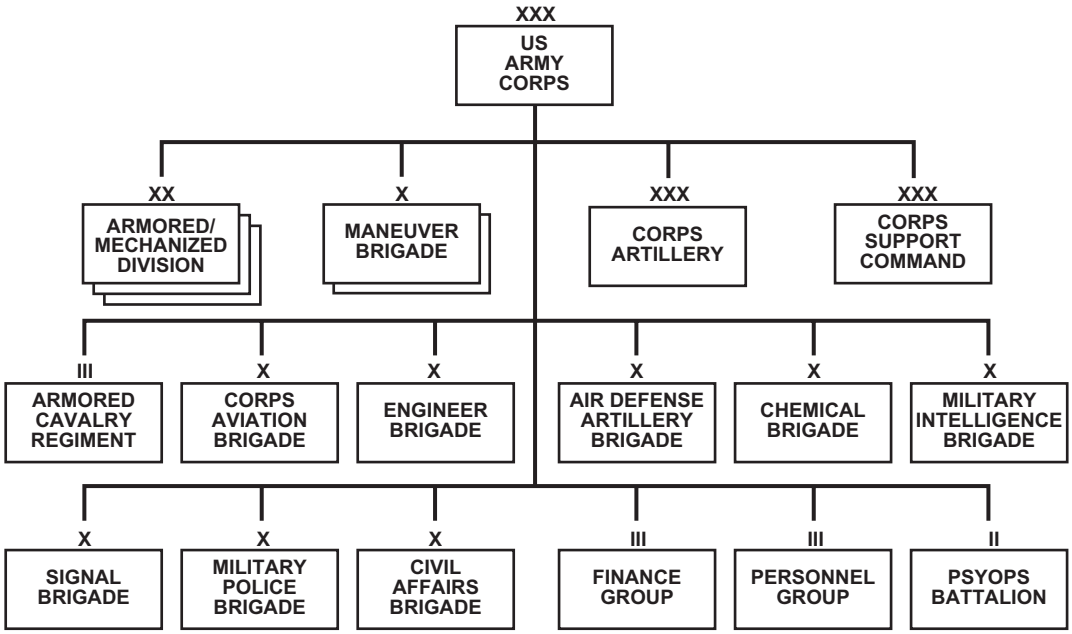

Figure A-1. Notional US Army Corps

a. Divisions/Attached Maneuver Brigades. A corps normally fights from two to five divisions. Divisions are fixed combined arms organizations capable of

performing any tactical mission and are largely self-sustaining. The corps may also C2 one or more attached maneuver brigades (e.g., light infantry, air assault).

b. ACR. The ACR consists of organic air and armored cavalry units supported by organic field artillery, air defense, engineer, military intelligence, chemical, and CSS units. The ACR operates as combined arms teams over wide areas that perform reconnaissance, security, and economy of force operations for the corps. The ACR can also perform the range of combat operations ascribed to the notional army brigade in this manual and may also be a force selected to operate under the C2 of a MEF. The TTP detailed for the notional army brigade's integrated employment with the MEF applies mainly to the ACR as well; differences are resolved through liaison and staff coordination. Figure A-2 depicts the heavy ACR's organization and major weapons systems.

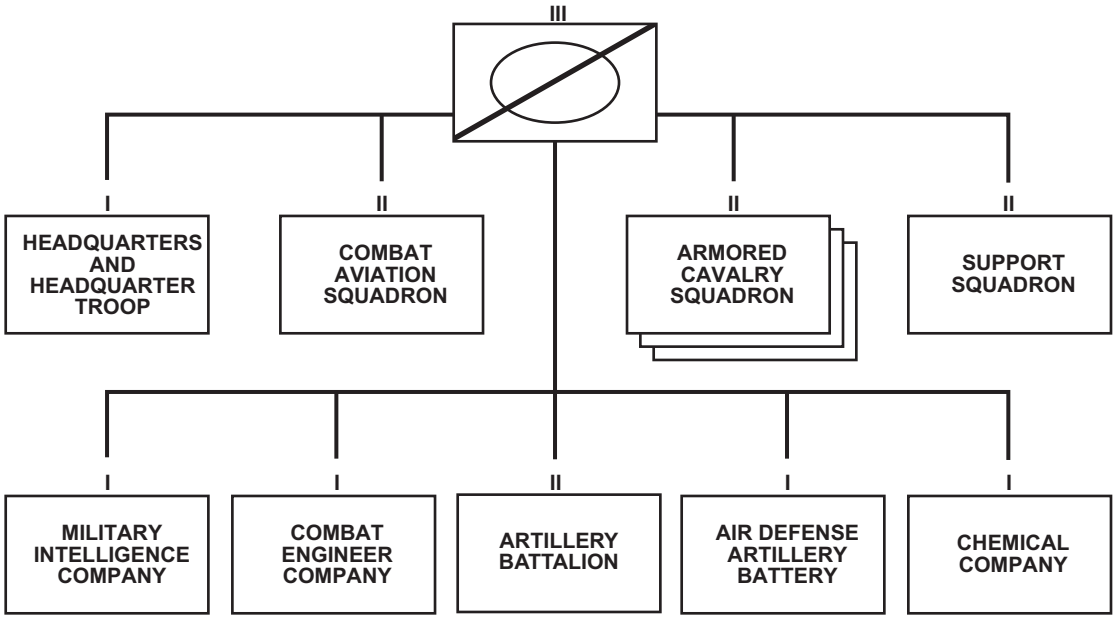

QTY	MAJOR WEAPONS
121	M1A2 TANKS
116	M3 CAVALRY FIGHTING VEHICLES
16	AH-64 APACHE HELICOPTERS
24	M109A2 HOWITZERS

Figure A-2. Heavy Armored Cavalry Regiment

c. Corps Aviation Brigade. The corps aviation brigade provides the corps commander with a significant capability for prosecuting air maneuver and deep operations. The brigade features a varying number of attack helicopter battalions (24 AH-64 Apaches each) that possess exceptional capabilities for night operations

and a mix of assault, medium-lift, and observation helicopters. The brigade requires support from the corps support command for maintenance, ground transportation, and Classes III and V sustainment.

d. Corps Artillery. The corps artillery includes all the artillery cannon and MLRS/ATACMS battalions that are not organic to maneuver units. These battalions are normally configured into field artillery brigades allocated as needed to augment the fires of committed maneuver units or retained under corps control to provide general support fires. Artillery supports the corps fight throughout the depth of the battlefield by delivering ATACMS fires at operational depths, supporting corps deep operations with SEAD fires, fighting the counterfire battle, providing weight to the close fight when and where needed, and supporting rear operations as required.

e. MI Brigade. The MI brigade contains operations, tactical exploitation, and aerial exploitation battalions. The military intelligence brigade provides intelligence and operations security in general support of the corps, and augments the intelligence capabilities of corps' subordinate units. The brigade collects and analyzes information from multiple sources, including signal, imagery, and human intelligence assets. The brigade's intelligence assets provide the corps with the ability to "*see deep*" into the enemy rear area and disrupt enemy C3 at critical times during the battle. The operations battalion provides an analysis and control element to the corps headquarters that assists the G-2 in intelligence and counterintelligence planning, analysis, production, and dissemination. It also supports the G3 in electronic warfare, operations security, and deception planning.

f. Engineer Brigade. The engineer brigade controls engineer units of the corps that are not organic to the maneuver units. The brigade provides mobility, counter-mobility, survivability, and general engineering support to the corps and augments the engineer support of committed maneuver and other subordinate units. The brigade may contain combat engineer battalions, combat engineer battalions (heavy), combat support equipment companies, assault float bridge companies, and tactical bridge companies. The brigade may form engineer groups to C2 engineer units when the size of the brigade requires the use of intermediate headquarters. A topographic engineer company in direct support of the corps from the EAC topographic engineer battalion provides terrain analysis and develops, produces and disseminates special topographic products such as overprints of standard Defense Mapping Agency mapping, charting, and geodesy products.

g. ADA Brigade. The ADA brigade contains units with weapons systems designed to counter air threats from low, medium, and high altitudes. Subordinate battalions employ a combination of gun and missile systems. Corps air defense battalions usually conduct tactical operations in support of corps priorities but may be tasked to reinforce subordinate unit air defense units. Corps air defenses are synchronized with both subordinate and EAC units. These latter systems normally include aircraft involved in defensive counterair operations of US and allied air forces; long-range, high-altitude missile systems of theater surface-to-air missile units; and the supporting C2 network of the integrated theater air defense network.

h. Signal Brigade. The signal brigade provides the installation, operation, and maintenance of communications within and between the corps C2 facilities, as well as an extensive communications network that connects all elements of the corps. To accomplish this, the brigade uses radio and wire communications to transmit voice, digital data, and facsimile into an integrated tactical communications system.

i. Chemical Brigade. The chemical brigade commands, controls, and coordinates chemical support operations of attached chemical units and provides those units with administrative and logistical support. The brigade evaluates and determines decontamination, NBC reconnaissance, and smoke support requirements for the brigade. The brigade commander then recommends NBC mission priorities to the corps commander. Based on corps commander guidance, the brigade provides smoke generator, NBC reconnaissance, and NBC decontamination support within the corps areas. Chemical battalions within the brigade support corps units in specified command or support relationships.

j. MP Brigade. The MP brigade commands and controls several MP battalions that provide battlefield circulation control, area security, enemy prisoner of war and civilian internee operations, and law and order for the corps. It conducts reconnaissance and surveillance to ensure security of main supply routes and area reconnaissance of other key areas in the corps rear. The brigade normally provides response forces to counter threats to the rear area that exceed the organic capabilities of CS and CSS units but do not require commitment of significant ground combat units. The brigade augments the organic MPs of committed maneuver units as required and may also operate in support of USAF units in air base ground defense operations. The brigade may conduct close liaison and mutually supporting operations with host-nation civil/military police to accomplish assigned missions.

k. CA Brigade. The functional composition of CA forces varies with the mission, availability, and qualification of CA personnel and supported command preferences. CA forces support JFC, service, or functional component commanders. United States Army Reserve (USAR) CA forces are separately organized into commands, brigades, and battalions. CA commands and brigades do not have organic subordinate units, and battalions do not have subordinate companies. CA forces are attached to subordinate component commanders for employment at operational and tactical levels. HHC provides CA planning teams and CA specialty teams to the corps headquarters and corps-level assets while the CA battalions provide CA planning teams, CA specialty teams, and CA teams to Army support commands, divisions, brigades, and battalions. The attached CA forces support the various commanders in accomplishing theater civil military operations (CMO) objectives. Generally, CA units are regionally aligned, (i.e., Central Command (CENTCOM), European Command (EUCOM), Pacific Command (PACOM), Southern Command (SOUTHCOM), United States Joint Forces Command (USJFC)) with a CA reserve component (RC) brigade supporting a corps. There is only one active duty battalion (96th CA Bn located at Fort Bragg, North Carolina) with five companies, and are each regionally aligned. This battalion is a worldwide contingency unit, which provides general CA support. All CA teams provide area expertise, gained through regional focus, cultural awareness, and when possible, language skills, to assist the

commander in assessing the impact of civil considerations on military operations and the impact of military operations on civilian activities. Through research, analysis, and personal contact, they provide the commander with a perspective of the non-military factors—areas, structures, capabilities, organizations, people, and events—that shape the operational environments. Through the civil-military operations center (CMOC), CA soldiers, augmented as necessary, conduct interagency coordination and help commanders at all levels successfully engage those factors to arrive at their desired endstate.

l. Tactical Psychological Operations Battalion (PSYOP). The Tactical PSYOP battalion (TPB) provides tactical PSYOP support to corps-level units and below. It also supports select special operations or conventional task forces. The TPB is task organized with three tactical PSYOP companies (TPC), each task organized with specialized detachments and teams. The TPB is normally OPCON to the corps with its subordinate units attached to the corps' subordinate divisions, brigades and battalions. However, it may be task organized under a psychological operations task force (POTF) or joint psychological operations task force (JPOTF) when conducting operations at the CINC or JTF level. Within the JTF, the JPOTF is a separate functional command similar to a joint special operations task force (JSOTF). A corps, not operating as a JTF, is externally supported at the JTF/CINC level by the JPOTF and internally supported by a TPB. The TPB commander and his staff advise the corps commander, plan, and coordinate PSYOP activities within the Corps area of operations for the three organic TPCs operating at the division level. Each TPC normally deploys with three tactical PSYOP detachments (TPD) and one tactical PSYOP development detachment (TPDD). The TPC deploys its TPDs and their subordinate tactical PSYOP teams to brigade and battalion levels to conduct loudspeaker operations and disseminate PSYOP materials developed by the TPDD and the JPOTF in support of the overall PSYOP campaign. The TPD and TPDD coordinates closely with the division staff to develop PSYOP plans and programs and to conduct target audience analysis within the division and corps areas of operation. The TPB is normally augmented with satellite communications, print, radio, and TV dissemination equipment and personnel from the PSYOP dissemination battalion (PDB). In the course of conducting their primary missions, PSYOP units collect and report PSYOP relevant information. Psychological operations are conducted *only* with the authorization of, and under guidelines established by, the CINC/JTF/ Corps/JPOTF commanders. Regional and tactical PSYOP units are capable of supporting civil affairs units in accomplishing many of the corps' CMO objectives. Another PSYOP contribution to the support of corps operations is the enemy prisoner of war and civilian internee PSYOP battalion (EPW/CI POB). This battalion, with its two EPW/CI companies, normally operates under the OPCON of the JPOTF and subsequently OPCON to the MP prisoner of war command (MPPWCOM). These PSYOP EPW/CI units support the CINC or JTF by collecting and reporting PSYOP relevant information gathered by screening, interviewing, and surveying EPW/CI camp populations and recording EPW audio surrender appeals. They support MPPWCOM by performing PSYOP staff planning, conducting PSYOP in support of camp operations, and by augmenting MP forces responsible for processing, monitoring, and controlling the populations at EPW/CI camps established at the corps level. (Reference 4th PSYOP Group PSOP, Version 1.1, 15 July, 1999 and FM 3-05.30, Psychological Operations, June 2000.)

m. COSCOM. The COSCOM serves as the focus for logistics activities in the corps. The COSCOM provides supply, field services, transportation (mode operations and movement control), maintenance, and medical support to the divisions and nondivisional units of the corps. The COSCOM contains a mix of subordinate units tailored to support the size and configuration of the corps. The COSCOM organizes tailored corps support groups to support the logistics requirements that exceed the organic capabilities of major subordinate units.

n. Finance Group. The finance group provides financial management support to a corps. The finance group provides financial management support to Army, joint and multinational commands, units, soldiers and authorized civilians. It is a modular, tailorable design to support the various forces in the corps area.

o. Personnel Group. The personnel group serves as the C2 headquarters for all personnel service battalions and separate companies in the corps areas, as well as for replacement companies, postal companies, and bands. Personnel service companies furnish divisional and nondivisional units with strength management, personnel accountability, strength reconciliation, replacement distribution, casualty reporting, postal operations, and morale support.

3. Corps Operations

a. Corps Area of Operations. The EAC normally designates the corps area of operations for both offensive and defensive operations. In addition to flank and rear boundaries, a corps forward boundary could be used to depict the geographic extent of its responsibilities. The corps normally divides its area of operations geographically into sub-areas to execute deep, close, and rear operations. The use of boundaries and other control measures in both linear and nonlinear environments facilitates both corps operational C2 and the delineation of responsibilities to corps subordinate elements.

b. Close Operations. Corps close operations encompass the current battles and engagements of its major maneuver elements, together with the CS and CSS activities currently supporting them. The corps close operations include the deep, close, and rear operations of its committed divisions; separate maneuver brigades and/or ACR. Not all activities that are part of close operations are necessarily taking place near the line of contact. For example, counterfire directed against enemy artilleries that support enemy regiments of divisions in contact comprise a component of close operations. Similarly, security operations, such as covering and screening forces, are part of close operations. Conversely, not all activities occurring near the line of contact are part of the close operations. Target acquisition assets, for instance, may locate in the areas where close operations are taking place but may be supporting deep operations. The outcome of the corps close fight will ultimately determine the success or failure of the corps battle. The corps deep and rear operations focus primarily on creating conditions favorable to the corps winning its close operations.

c. Deep Operations. Corps deep operations include those activities directed against enemy forces not currently engaged in close operations but capable of

engaging in or influencing future close operations. Maneuver forces, fire support, and supporting C4I systems combine to plan and execute deep operations. Deep operations create leverage in the close fight. Corps planners project future operations and determine what conditions the corps can create and exploit to defeat the enemy to accomplish operational objectives. Deep operations depend on careful analysis of enemy capabilities to interfere with friendly operations and enemy vulnerability to attack. Those enemy forces, including related C2 systems, which can participate in time and space against projected operations, provide relevant targets for attack. Based on the recommendations of the corps staff, the commander determines deep operations objectives and designs them to shape future close operations. Objectives in attacking enemy forces in depth are designed to significantly alter the tempo of enemy operations. This reduced tempo isolates close operations on terms favorable to the corps. Attacks to disrupt commitment of follow-on enemy forces into battle, synchronized with attacks against C2 systems and other operationally significant targets, can produce decisive effects or create conditions for close operations to achieve decisive effects. To realize the maximum payoff from these attacks, deep operations are integrated within the overall concept of operation.

d. Rear Operations. Corps rear operations consist of those activities from the corps rear boundary forward to the rear boundaries of committed maneuver units. The corps conducts rear operations to the corps freedom of maneuver and continuity of operations, including logistics and C2. Continuous reconnaissance and timely intelligence collection and dissemination are essential for successful rear operations. Rear operations must include clear C2 arrangements, dedicated fire support, and designated combat forces to respond to rear-area threats as appropriate.

Appendix B

MARINE AIR-GROUND TASK FORCES (MAGTFs)

1. Background

The MAGTF is an integrated air-ground team with its own CSSE, operating at the operational and tactical levels, under the direction and control of a single commander. The MAGTF is task organized to accomplish assigned missions and designed to exploit its combat power with highly integrated air-ground operations utilizing combined arms teams.

2. Operational Characteristics

a. The missions assigned to MAGTFs should exploit their primary characteristics:

(1) An expeditionary nature.

(2) Extremely mobile (strategically).

(3) Capable of forcible entry.

(4) All weather ground operations with environmental versatility.

(5) Capability for independent action.

(6) Sea-air-land coordination.

(7) Logistics strengths and limitations.

(8) Operational flexibility.

(9) Tactical surprise.

(10) Compatible with multiservice, joint, multinational, and combined operating forces.

(11) Forward-deployed or sea-based.

b. While MAGTFs are organized primarily to support naval operations, they may also be employed in support of land operations or other duties as directed:

(1) Strategic deception, which forces an opponent to disperse forces along vulnerable littorals.

(2) Raids destroying installations, units, and/or individuals.

(3) Forcible entry operations establishing beachheads or airheads, which gain safe enclaves for the introduction of large scale follow-on US forces.

(4) Extractions evacuating threatened forces or individuals.

(5) Strategic reserve, thus exploiting opportunities and countering threats.

(6) Reinforcement.

(7) Controlling the landward flank of a naval operation.

(8) Low intensity conflict.

(a) Counter insurgency.

(b) Terrorism counteraction.

(c) Peacekeeping.

(d) Peacetime contingency operations.

3. Types of MAGTFs

MAGTFs range in size from a special purpose MAGTF (SPMAGTF), which can number in size from 100 to 3000 Marines, to an MEF, which can number from 35,000 to 45,000 Marines. There are four types of MATGFs: the MEF, the MEB, the MEU, and the SPMAGTF. The MEB is discussed in Chapter I. This appendix discusses the remaining three types of MAGTFs.

a. The MEF. A MEF is the largest and most capable MAGTF. The MEF is normally comprised of at least a reinforced Marine division, a MAW, a FSSG, and a CE. MEFs are capable of conducting the full range of amphibious operations as well as the following operations:

(1) Reinforcement of a committed MAGTF or other force.

(2) Sustained combat operations ashore.

(3) Seizure or defense of advance naval bases.

(4) Military operations other than war (MOOTW).

(5) Noncombatant evacuation operations (NEOs).

b. The MEF consists of the following components:

(1) GCE - a Marine division.

(a) One headquarters battalion.

(b) Three infantry regiments.

(c) One artillery regiment.

(d) One tank battalion.

(e) One LAR battalion.

(f) One AAV battalion.

(g) One combat engineer battalion.

(2) Aviation combat element (ACE) - a MAW.

(a) One to four Marine aircraft groups consisting of fixed- and rotary-winged aircraft from Marine Fighter Attack (VMFA), VMFA (AW), Marine Attack (VMA), Marine Tactical Electronic Warfare (VMAQ), Marine Aerial Refueler Transport (VMGR), Marine Light/Attack Helicopter (HMLA), Marine Heavy Helicopter (HMH), and Marine Medium Helicopter (HMM) squadrons.

(b) One Marine air control group (MACG).

(c) One Marine wing support group (MWSG).

(d) One Marine wing headquarters squadron (MWHS).

(e) One Marine aerial refueler transport squadron (VMGR).

(f) One Marine tactical electronic warfare squadron (VMAQ).

(g) One Marine unmanned aerial vehicle squadron (VMU).

(3) Combat service support element (CSSE) - an FSSG.

(a) Transport Support Battalion (TSB), which includes the former landing support battalion and motor transport battalion.

(b) One supply battalion.

(c) One maintenance battalion.

(d) One engineer support battalion.

(e) One medical battalion.

(f) One dental battalion.

c. The MEU. A MEU is capable of selected conventional maritime operations of limited duration. Some MEUs receive special training and obtain a designation as being special operations capable [MEU(SOC)]. The forward deployed MEU is organized and equipped to provide the naval commander or JFC with a rapidly deployable, sea-based force with 15 days of sustainment optimized for forward presence and crisis response missions. The MEU may also serve as an enabling force for follow-on MAGTFs or other larger forces (i.e., an Army corps) in the event the situation or mission requires additional capabilities and resources. The MEU is comprised of a CE, a reinforced infantry battalion, reinforced helicopter squadron, and MEU service support group (MSSG). The MEU is capable of conducting limited amphibious operations as well as the following operations:

(1) NEOs.

(2) Security operations (independent of or in support of a larger force).

(3) Tactical recovery of aircraft and personnel (TRAP).

(4) Direct action.

(5) MOOTW.

(6) Limited hostage rescue capabilities.

d. The MEU consists of the following components:

(1) CE.

(a) Force reconnaissance platoon.

(b) Radio battalion detachment.

(c) LAAD detachment.

(d) Air support liaison team.

(e) Sea-air-land (SEAL) detachment.

(2) GCE.

(a) One reinforced rifle battalion.

(b) One artillery battery.

(c) One AAV platoon.

(d) One reconnaissance platoon.

(e) One LAR platoon.

(f) One combat engineer platoon.

(3) ACE.

(a) One Marine medium helicopter detachment (HMM).

(b) One Marine heavy helicopter detachment (HMH).

(c) One Marine light/attack helicopter detachment (HMLA).

(d) One Marine attack squadron detachment (VMA).

(e) One Marine air control group detachment (MACG).

(4) CSSE- a MEU service support group (MSSG).

(a) Supply detachment.

(b) Maintenance detachment.

(c) Transportation detachment.

(d) Engineer detachment.

(e) Medical/dental detachment.

(f) Landing support detachment (beach, port, airfield).

(g) Administrative detachment.

e. The SPMAGTF. A SPMAGTF is a small, task-organized force configured to missions for which the MEF, MEB, or MEU are not appropriate. It can be organized, trained, and equipped to conduct a wide variety of conventional and other operations. It can be deployed by various means, to include amphibious or commercial ships and tactical or strategic airlift. These forces are typically composed of Marines highly trained in day/night operations to include insertion/extraction, raid, and strike operations. They may possess extensive surveillance and reconnaissance capabilities. SPMAGTF missions include mobile training teams, security assistance operations, and small independent action forces.

Appendix C

REPORTING FORMATS

1. The mine operations report messages in this appendix are US message Text Formats. The unexploded ordnance (UXO) spot report is from FM 21-16/FMFM 13-8-1.

2. Mine Countermeasures Report (MCMREP).

MCMREP MESSAGE TEXT FORMAT:

SEG OCC RPT SETID

C EXER/_____/.....//
1 EXERCISE NICKNAME 2 EXERCISE MESSAGE ADDITIONAL IDENTIFIER
M [1-56 ANBS] O [1-16 ANBS]

Set 1 Purpose: THE EXER SET PROVIDES THE DESIGNATED CODE NAME OR NICKNAME, IF THE MESSAGE SUPPORTS AN EXERCISE.

O
OPER/_____/...../...../...../.....//
1 OPERATION CODEWORD 2 PLAN ORIGINATOR AND NUMBER 3 OPTION NICKNAME
4 SECONDARY OPTION NICKNAME
M [1-32 ANBS] O [1-23 ANS] O [1-23 ANBS]
O [1-23 ANBS]

Set 2 Purpose: THE OPER SET PROVIDES THE DESIGNATED CODE NAME OR NICKNAME, IF THE MESSAGE SUPPORTS AN OPERATION.

M
MSGID/_____/_____/
...../...../...../.....//
1 MESSAGE TEXT FORMAT IDENTIFIER 2 ORIGINATOR 3 MESSAGE SERIAL NUMBER
4 MONTH NAME 5 QUALIFIER 6 SERIAL NUMBER OF QUALIFIER
M [1-20 ANBS] M [1-30 ANBS] O [1-7 ANBS]
O [3 A] O [3 A] O [1-3 N]

Set 3 Purpose: THE MSGID SET PROVIDES THE MESSAGE IDENTIFICATION AND ORIGINATOR.

O R
REF/_____/_____/_____/
_____/...../...../.....R.....//
1 SERIAL LETTER 2 TYPE OF REFERENCE 3 ORIGINATOR 4 DATE AND/OR TIME OF REFERENCE 5 SERIAL NUMBER OF REFERENCE 6 SPECIAL NOTATION
7 SIC CODE OR FILING NUMBER
M [1 A] M [1/20 ANBS] M [1-30 ANBS] M [6/13 AN]
O [1-10 ANBS] O [5 A] O [1/10 ANBS]

Set 4 Purpose: THE REF SET PROVIDES BOTH USMTF AND NON-USMTF REFERENCES.

C AMPN/_____//
1 FREE TEXT
M [1-U ANBS]

Set 5 Purpose: THE AMPN SET PROVIDES ADDITIONAL INFORMATION ON THE PRECEDING REF SET. ADDITIONALLY, THE AMPN SET PROVIDES IDENTIFYING INFORMATION FOR A NON-USMTF REFERENCE.

C NARR/_____//
1 FREE TEXT
M [1-U ANBS]

Set 6 Purpose: THE NARR SET PROVIDES ADDITIONAL INFORMATION ON THE PRECEDING TWO OR MORE REF SETS. ADDITIONALLY, THE NARR SET PROVIDES IDENTIFYING INFORMATION FOR NON-USMTF REFERENCES.

O R
MXPN/_____/_____/
...../...../...../
...../.....//
1 SHIP OR SUBMARINE TYPE 2 SHIP OR TASK DESIGNATOR 3 SHIP LOCATION
4 VERIFIED COURSE/SPEED IN KNOTS 5 VERIFIED DAY-TIME 6 VERIFIED BEARING AND DISTANCE 7 EXERCISE MINE FLARE COLOR
M [2/4 A] M [1/30 ANBS] O [6/36 ANBS]
O [11-16 ANS] O [8 AN] O [9-16 ANS]
O [3-6 A]

Set 7 Purpose: THE MXPN SET REPORTS MINE EXPLOSION INFORMATION.

O
MDETDAT/...../...../...../
...../...../
...../.....//
1 DETECTING VESSEL TYPE 2 SHIP NAME 3 MINE COORDINATES
4 VERIFIED COURSE/SPEED IN KNOTS 5 VERIFIED DAY-TIME 6 NUMBER OF MINES DETECTED 7 MINE INDEX TYPE
O [2/4 A] O [1-30 ANBS] O [6/36 ANBS]
O [11-16 ANS] O [8 AN] O [1-3 N]
O [2-9 AN]

Set 8 Purpose: THE MDETDAT SET REPORTS INFORMATION ON DETECTED MINES.

O R MOPS/_____/.....//
1 MCM OPERATION TYPE 2 VERIFIED MONTH DATE-TIME
M [3-8 A] O [11 AN]

Set 9 Purpose: THE MOPS SET REPORTS INFORMATION ON THE TYPE OF MCM OPERATION IN PROGRESS.

O
MTASK/_____/_____/
.....
...../.....R...../.....R.....//
1 MCM TASK ORDER NUMBER 2 UNIT OR SHIP TASKED 3 Q-ROUTE NUMBER OR MCM AREA NAME 4 TIME MODIFIER 5 VERIFIED EFFECTIVE TIME
M [5-6 AN] M [1/30 ANBS] O [1/20 ANBS]
O [2-3 A] O [8/11 AN]

Set 10 Purpose: THE MTASK SET PROVIDES INFORMATION ON THE MCM TASK.

O R
MINE/_____/...../
...../...../
...../...../.....//
1 MINE INDEX TYPE 2 MINE REFERENCE NUMBER 3 LAYING REFERENCE NUMBER (LRN) 4 MINE COORDINATES 5 NAVIGATION SYSTEM CODE 6 VERIFIED DAY-TIME 7 MINE STATUS
M [2-9 AN] O [4-7 ANS] O [2-15 ANS]
O [6/36 ANBS] O [1-2 N] O [8 AN]
O [6/17 ANS]

Set 11 Purpose: THE MINE SET PROVIDES INFORMATION ON MINES.

O R MSUM/_____/.....//
1 MINE REFERENCE NUMBER 2 VERIFIED MONTH DATE-TIME
M [4-7 ANS] O [11 AN]

Set 12 Purpose: THE MSUM SET PROVIDES A SUMMARY OF MINEFIELDS.

O R MTYPE/_____/.....//
1 NUMBER OF MINES BY TYPE 2 MINE INDEX TYPE
M [1-3 N] O [2-9 AN]

Set 13 Purpose: THE MTYPE SET PROVIDES INFORMATION ON THE NUMBER AND TYPE OF MINES.

O
PGRSS/_____/...../
...../...../
...../
...../
...../
...../
...../
...../
...../
.....R.....//

1 Q-ROUTE SEGMENT 2 MCM OPERATION SUFFIX 3 MCM OPERATION STAGE NUMBER 4 PERCENTAGE OF TASK COMPLETED 5 VERIFIED MONTH DATE-TIME 6 VERIFIED AGGREGATE ACTUATION WIDTH IN METERS OR YARDS 7 VERIFIED SWEEP OR DETECTION WIDTH IN METERS OR YARDS 8 SWEEP OR DETECTION PROBABILITY 9 VERIFIED TRACK SPACING IN METERS OR YARDS 10 VERIFIED SWEPT DEPTH IN METERS OR FEET 11 VERIFIED STANDARD DEVIATION IN METERS OR YARDS 12 NUMBER OF RUNS PER TRACK

M [7-14 ANS] O [1 A] O [2 N]
O [2 N] O [11 AN]
O [5-6 AN] O [5-6 AN]
O [4 NS]
O [5-6 AN] O [3-6 AN]
O [5-6 AN] O [6-8 ANS]

Set 14 Purpose: THE PGRSS SET PROVIDES INFORMATION ON THE PROGRESS OF THE MCM TASK.

O R
NOOP/_____/...../
...../
.....//
1 SHIP NAME 2 VERIFIED DAY-TIME OF DEFECT 3 VERIFIED DAY-TIME ESTIMATED OPERATIONAL 4 VERIFIED MONTH DATE-TIME OF RELATED NAVOPDEF
M [1-30 ANBS] O [8 AN] O [8 AN]
O [11 AN]

Set 15 Purpose: THE NOOP SET PROVIDES INFORMATION ON NONOPERATIONAL SHIPS.

O R
UWCOND/_____/...../
...../...../
...../
...../
...../
...../...//
1 UNDERWATER LOCATION 2 VERIFIED DAY-TIME 3 OCEANOGRAPHIC BOTTOM TYPE 4 REVERBERATION LEVEL 5 VERIFIED UNDERWATER VISIBILITY IN YARDS OR METERS 6 VERIFIED TIDAL STREAM COURSE/ SPEED IN KNOTS 7 VERIFIED UNDERWATER DEPTH IN METERS OR FEET 8 VERIFIED UNDERWATER SOUND VELOCITY 9 VERIFIED THERMAL LAYER DEPTH IN METERS OR FEET
M [6/36 ANBS] O [8 AN] O [1 A]
O [2-3 A] O [3-5 AN]
O [11-16 ANS] O [3-7 AN]
O [5-8 AN] O [3-7 AN]

Set 16 Purpose: THE UWCOND SET PROVIDES INFORMATION ON UNDERWATER CONDITIONS.

O CONMARK/_____/...../
...../.....//

1 CONTACT MARKER DESIGNATOR 2 LOCATION 3 VERIFIED BEARING AND DISTANCE 4 VERIFIED DAY-TIME OF POSITION
M [4/7 ANS] O [6/36 ANBS] O [9-16 ANS] O [8 AN]

Set 17 Purpose: THE CONMARK SET PROVIDES INFORMATION ON A CONTACT MARKER.

O MZONE/_____/_____/_____/
.....R...../
.....R.....//

1 TYPE OF MINE ZONE 2 VERIFIED DAY-TIME MINE ZONE RISK STATUS 3 MINE ZONE RISK STATUS 4 VERIFIED DAY-TIME OF MINE ZONE PREDICTED STATUS RISK 5 PREDICTED MINE ZONE RISK STATUS
M [1-20 ANBS] M [8 AN] M [3/10 AB] O [8 AN] O [3/10 AB]

Set 18 Purpose: THE MZONE SET PROVIDES INFORMATION ON THE STATUS OF THE MINE ZONE.

C AMPN/_____//
1 FREE TEXT
M [1-U ANBS]

Set 19 Purpose: THE AMPN SET PROVIDES INFORMATION THAT PERTAINS TO THE MINE ZONE STATUS.

M R MBUOY/_____/...../...../
...../.....//
1 MCM BUOY TYPE 2 MCM BUOY LOCATION 3 BUOY DESIGNATOR 4 VERIFIED DRAG ERROR 5 MCM BUOY MALFUNCTION TYPE
M [4-10 ANBS] O [6/36 ANBS] O [4-7 AN] O [9-12 ANS] O [4-8 A]

Set 20 Purpose: THE MBUOY SET PROVIDES INFORMATION ON MCM BUOYS.

O MAP/_____/...../
.....R...../.....R...../
.....R.....//
1 MAP OR CHART SERIES DESIGNATOR 2 MAP OR CHART SUFFIX NUMBER 3 MAP OR CHART SHEET NUMBER 4 MAP OR CHART EDITION NUMBER 5 GEODETIC DATUM
M [1-12 ANS] O [2 N] O [1-14 ANS] O [1-6 ANS] O [4-25 ANBS]

Set 21 Purpose: THE MAP SET PROVIDES THE MAP REFERENCES FOR THE MCM REPORT.

O LOGSIT/...../...../
...../...../
...../
...../...//
1 REMAINING FUEL OIL IN PERCENT 2 REMAINING WATER IN PERCENT 3 REMAINING PROVISIONS IN PERCENT 4 REMAINING LUBE OIL IN PERCENT 5 REMAINING AMMUNITION IN PERCENT 6 REMAINING NUMBER OF MINE DISPOSAL WEAPONS/CHARGES 7 VERIFIED MONTH DATE-TIME
O [2 N] O [2 N] O [2 N]
O [2 N] O [2 N] O [1-3 N]
O [11 AN]

Set 22 Purpose: THE LOGSIT SET PROVIDES INFORMATION ON THE LOGISTICS SITUATION.

O ASORT/...../...../
...../...../...../
...../...../
...../...../
...../...//
1 SORTIE IDENTIFICATION NUMBER 2 MCM EQUIPMENT 3 FLIGHT TIME IN HOURS AND TENTHS 4 TOW TIME OUT OF TRACK 5 OP TOW TIME 6 STREAM TIME IN MINUTES 7 RECOVERY TIME IN MINUTES 8 TASK HOURS LOST DURING SORTIE 9 TRANSIT DISTANCE IN NAUTICAL MILES 10 MISSION ABORT CASUALTY INDICATOR 11 TOTAL TURN TIME (1-30 MIN)
O [1-3 N] O [1-2 N] O [4 NS]
O [3 NS] O [4 NS] O [2 N] O [2 N]
O [1-2 N] O [1-2 N] O [2-3 A]
O [1-2 N]

Set 23 Purpose: THE ASORT SET REPORTS THE RESULTS OF A MINE COUNTERMEASURES AIR SORTIE.

C AMPN/_____//
1 FREE TEXT
M [1-U ANBS]

Set 24 Purpose: THE AMPN SET PROVIDES INFORMATION ON THE MCM EQUIPMENT USED IN THE AIR SORTIE.

O ASUM/...../...../
...../...../
...../...//
1 TOTAL NUMBER OF SORTIES 2 NUMBER OF HELOS IN OPERATION 3 HOURS IN REPORTING PERIOD 4 HOURS SCHEDULED OFF-TASK 5 WEATHER DOWN TIME
O [1-2 N] O [1-2 N] O [1-3 N]
O [1-3 N] O [1-3 N]

Set 25 Purpose: THE ASUM SET PROVIDES AIR SUMMARY INFORMATION.

O DIVDAT/...../...../
...../...../
...../.....//
1 MINE REFERENCE NUMBER 2 ARM THRUST 3 PERCENT OF MINE BURIED
4 WATER DEPTH IN METERS 5 BOTTOM CURRENT IN TENTHS OF KNOTS 6 SAND RIDGE HEIGHT IN TENTHS OF METERS
O [4-7 ANS] O [1 A] O [1-3 N]
O [1-3 N] O [3 NS] O [3 NS]

Set 26 Purpose: THE DIVDAT SET PROVIDES INFORMATION OBTAINED BY DIVERS.

O ENVIRN/...../...../
...../...../.....//
1 LOCATION 2 VERIFIED MONTH DATE-TIME 3 WAVE PERIOD IN SECONDS
4 SEA WAVE HEIGHT 5 WEATHER IMPACT
O [6/36 ANBS] O [11 AN] O [1-2 N]
O [2-5 AN] O [1 A]

Set 27 Purpose: THE ENVIRN SET PROVIDES ENVIRONMENTAL INFORMATION.

O CHRON/...../...../
...../...../
...../...../
...../
...../...../
.....//
1 HOURS SCHEDULED OFF-TASK 2 WEATHER DOWN TIME 3 MAINTENANCE DOWN TIME 4 TOTAL TIME TO STREAM GEAR IN MINUTES 5 TOTAL TIME TO RECOVER GEAR IN MINUTES 6 TOTAL NUMBER OF TURNS 7 TOTAL TURN TIME (1-999 MIN) 8 TURN SYSTEM 9 TOTAL TRANSIT TIME TO AND FROM OPAREA IN MINUTES 10 EFFECTIVE TIME ON TASK IN THE LAP IN HOURS
O [1-3 N] O [1-3 N] O [1-3 N]
O [1-3 N] O [1-3 N]
O [1-3 N] O [1-3 N] O [3-20 ANBS] O [1-3 N]
O [3-5 NS]

Set 28 Purpose: THE CHRON SET PROVIDES A CHRONOLOGY FOR THE MCM TASKS.

O NAV/...../...../...../.....//
1 VERIFIED MONTH DATE-TIME 2 NAVIGATION SYSTEM CODE 3 POSITION
O [11 AN] O [1-2 N] O [6/36 ANBS]

Set 29 Purpose: THE NAV SET PROVIDES NAVIGATION INFORMATION.

C AMPN/_____//
1 FREE TEXT
M [1-U ANBS]

Set 30 Purpose: THE AMPN SET PROVIDES INFORMATION ON THE NAVIGATION SYSTEM USED TO DETERMINE THE POSITION.

O AKNLDG/_____/.....R.....///
1 ACKNOWLEDGEMENT REQUIREMENT INDICATOR 2 INSTRUCTIONS OR UNIT
M [2-3 A] O [1/50 ANBS]

Set 31 Purpose: THE AKNLDG SET PROVIDES OPERATOR ACKNOWLEDGEMENT AND NOT COMMUNICATIONS CENTER ACKNOWLEDGEMENT.

MCMREP MESSAGE EXAMPLE:

EXER/SUN BIRD 93//
MSGID/MCMREP/CTF 425//
MXPN/MHC/BRECON/280T0-EE-12.5NM8/061T7-12KTS3/161731Z9/315T9-120M3/GREEN//
MDETDAT/MSC/ALSSUND/573022.4N3-0010413.3W2/120T3-4KTS4/261520Z6/3/1ABCDEFGH//
MOPS/ASS/061200Z9SEP//
MTASK/125B2/BRONNINGTON/82/ON/121345Z6/OFF/121800Z2//
MINE/1ABCDEFGH/JE25/0569-87/270T9-DD-12.5NM8/3/201340Z0/SUNK201521Z1//
MSUM/JE01/132212Z1JUN//
MTYPE/42/1ABCDEFGH//
PGRSS/42A2-B8/F/71/50/121400Z8JUN/350M8/250M7/0.90/300M3/40M4/050M5/PS25-02/MS25-03/PS50-03//

NOOP/GIETZOORN/150631Z6/151600Z3/150700Z3OCT//
UWCOND/501000N6-0030300W6/190700Z7/B/LOW/3M3/020T2-1.2KTS3/20M2/1475MPS7/50M5//
CONMARK/MRN:00142/524900N0-0011500E7/035T8-23M5/241214Z4//
MZONE/HARBOR/071200Z0/CLOSED//
AMPN/SHIPS ANCHOR IN FLUSHING ROADS//
MBUOY/DATUM/512002N0-0010010E2/PS102A/150T6-45YD9/NOFLAG//
MAP/DMA13142/14/13/MAY84/WGS 1984//
LOGSIT/90/85/99/99/99/53/221100Z6SEP//
ASORT/1/45/03.0/0.5/02.0/15/30/1/5/NO/20//
ASUM/10/6/48/24/4//
DIVDAT/JE01/A/10/35/1.0/1.5//

ENVIRN/5120.200N0-00100.100E2/121300Z7JAN/20/1M/A//
CHRON/2/1/1/49/52/6/60/MK104/45/2.5//
NAV/221100Z6SEP/3/5120.200N0-00100.100E2//
AKNLDG/YES//

3. MCM Tasking (OPTASK MCM).

OPTASK MCM MESSAGE TEXT FORMAT:

SEG OCC RPT SETID

C EXER/_____/.....//
1 EXERCISE NICKNAME 2 EXERCISE MESSAGE ADDITIONAL IDENTIFIER
M [1-56 ANBS] O [1-16 ANBS]

Set 1 Purpose: THE EXER SET PROVIDES THE DESIGNATED CODE NAME OR NICKNAME, IF THE MESSAGE SUPPORTS AN EXERCISE.

Note: THE EXER SET IS PROHIBITED IF THE OPER SET IS USED.

O
OPER/_____/...../
...../...../.....//
1 OPERATION CODEWORD 2 PLAN ORIGINATOR AND NUMBER 3 OPTION NICKNAME 4 SECONDARY OPTION NICKNAME
M [1-32 ANBS] O [1-23 ANS] O [1-23 ANBS] O [1-23 ANBS]

Set 2 Purpose: THE OPER SET PROVIDES THE DESIGNATED CODE NAME OR NICKNAME, IF THE MESSAGE SUPPORTS AN OPERATION.

Note: THE OPER SET IS PROHIBITED IF THE EXER SET IS USED.

M MSGID/_____/_____/
...../...../...../...../.....//

1 MESSAGE TEXT FORMAT IDENTIFIER 2 ORIGINATOR 3 MESSAGE SERIAL NUMBER 4 MONTH NAME 5 QUALIFIER 6 SERIAL NUMBER OF QUALIFIER
M [1-20 ANBS] M [1-30 ANBS] O [1-7 ANBS] O [3 A] O [3 A] O [1-3 N]

Set 3 Purpose: THE MSGID SET PROVIDES THE MESSAGE IDENTIFICATION AND ORIGINATOR.

Note: FIELD 1 OF THE MSGID SET MUST EQUAL “OPTASK MCM”.

O R REF/_____/_____/_____/
_____/...../...../
.....R.....//
1 SERIAL LETTER 2 TYPE OF REFERENCE 3 ORIGINATOR 4 DATE AND/OR TIME OF REFERENCE 5 SERIAL NUMBER OF REFERENCE 6 SPECIAL NOTATION 7 SIC CODE OR FILING NUMBER
M [1 A] M [1/20 ANBS] M [1-30 ANBS] M [6/13 AN] O [1-10 ANBS] O [5 A] O [1/10 ANBS]

Set 4 Purpose: THE REF SET PROVIDES BOTH USMTF AND NON-USMTF REFERENCES.

C AMPN/_____//
1 FREE TEXT
M [1-U ANBS]

Set 5 Purpose: THE AMPN SET PROVIDES ADDITIONAL INFORMATION ON THE PRECEDING REF SET. ADDITIONALLY, THE AMPN SET PROVIDES IDENTIFYING INFORMATION FOR A NON-USMTF REFERENCE.

Note: THE AMPN SET IS MANDATORY IF FIELD 2 OF THE REF SET IS A COMMUNICATION TYPE AND ONLY ONE REFERENCE IS USED.

C NARR/_____//
1 FREE TEXT
M [1-U ANBS]

Set 6 Purpose: THE NARR SET PROVIDES ADDITIONAL INFORMATION ON THE PRECEDING TWO OR MORE REF SETS. ADDITIONALLY, THE NARR SET PROVIDES IDENTIFYING INFORMATION FOR NON-USMTF REFERENCES.

Note: THE NARR SET IS MANDATORY IF THE REF SET IS REPEATED ONE OR MORE TIMES AND LFIELD 2 OF ONE OR MORE REF SETS CITES A COMMUNICATION TYPE.

O MTASK/_____/_____/
...../.....R...../.....R.....//
1 MCM TASK ORDER NUMBER 2 UNIT OR SHIP TASKED 3 Q-ROUTE NUMBER OR MCM AREA NAME 4 TIME MODIFIER 5 VERIFIED EFFECTIVE TIME
M [5-6 AN] M [1/30 ANBS] O [1/20 ANBS]
O [2-3 A] O [8/11 AN]

Set 7 Purpose: THE MTASK SET PROVIDES INFORMATION ON THE MCM TASK.

O MNOP/_____/_____R_____/
_____R_____/.....R.....//
1 MINE OPERATIONS DIRECTIVE 2 ENEMY THREAT 3 TYPE OF MINE OPERATION 4 MCM OPERATION STAGE NUMBER
M [5-7 A] M [7-9 A] M [4-8 A]
O [2 N]

Set 8 Purpose: THE MNOP SET PROVIDES INFORMATION ON THE MCM OPERATIONS.

O MPARA/_____/_____
/...../
...../.....//
1 NUMBER OF RUNS 2 PERCENTAGE CLEARANCE REQUIRED OR ACHIEVED 3 VERIFIED AGGREGATE ACTUATION WIDTH IN METERS OR YARDS 4 VERIFIED TRACK SPACING IN METERS OR YARDS 5 VERIFIED STANDARD DEVIATION IN METERS OR YARDS
M [2 N] M [2-4 NS]
O [5-6 AN] O [5-6 AN]
O [5-6 AN]

Set 9 Purpose: THE MPARA SET PROVIDES INFORMATION ON THE MCM TASK PARAMETERS.

O R
MDA/...../.....R...../.....R.....//
1 MINE DANGER AREA NAME 2 MINE DANGER AREA LOCATION 3 MINE INDEX TYPE
O [6-20 ANBS] O [6/36 ANBS] O [2-9 AN]

Set 10 Purpose: THE MDA SET DESCRIBES THE MINE DANGER AREA.

O R MTYPE/_____/.....//

1 NUMBER OF MINES BY TYPE 2 MINE INDEX TYPE
M [1-3 N] O [2-9 AN]

Set 11 Purpose: THE MTYPE SET PROVIDES INFORMATION ON THE NUMBER AND TYPE OF MINES.

O R MREPT/_____/
_____
/.....//
1 REPORT MODIFICATION ACTION 2 MINE WARFARE REPORT OR SIGNAL CODE 3 VERIFIED TIME
M [3-6 A] M [3/13 ABS]
O [8/11 AN]

Set 12 Purpose: THE MREPT SET PROVIDES INFORMATION ON CHANGES FOR MINE WARFARE REPORTING REQUIREMENTS.

O R CHANDAT/...../...../...../
...../...../
...../...../
...../...../
...../...../...../...../...//
1 CHANNEL IDENTIFIER 2 START POSITION 3 END POSITION 4 VERIFIED CHANNEL DIRECTION 5 VERIFIED CHANNEL LENGTH IN NAUTICAL MILES 6 VERIFIED CHANNEL WIDTH IN METERS OR YARDS 7 VERIFIED TIDAL STREAM COURSE/ SPEED IN KNOTS 8 VERIFIED START DAY-TIME 9 VERIFIED END DAY-TIME 10 VERIFIED DANBUOY LINE OFFSET IN METERS OR YARDS 11 VERIFIED DANLINE DIRECTION 12 NUMBER OF DANBOUYS 13 VERIFIED DANBUOY SPACING IN METERS OR YARDS

O [2/8 ANS] O [6/36 ANBS] O [6/36 ANBS] O [5-7 ANS]
O [4-8 ANS] O [3-7 AN]
O [11-16 ANS] O [8 AN] O [8 AN] O [5-9 ANS]
O [5-7 ANS] O [1-2 N] O [3-7 AN]

Set 13 Purpose: THE CHANDAT SET PROVIDES CHANNEL INFORMATION.

O TRINST/...../...../
...../
...../
...../.....R.....
/.....R.....//

1 PASSAGE DESIGNATOR 2 VERIFIED DAY-TIME OF TRANSIT START 3 VERIFIED RECOMMENDED TRANSIT SPEED 4 VERIFIED SHIP TRANSIT LONGITUDINAL INTERVAL 5 VERIFIED GROUP TRANSIT LONGITUDINAL INTERVAL 6 NAME OF LEAD SHIP IN GROUP 7 NUMBER OF SHIPS IN GROUP

O [4-6 A] O [8 AN] O [5-8 ANS]
O [3-7 AN]
O [4-6 AN] O [1-30 ANBS]
O [1-2 N]

Set 14 Purpose: THE TRINST SET PROVIDES MCM TRANSIT INFORMATION.

C AMPN/_____//
1 FREE TEXT
M [1-U ANBS]

Set 15 Purpose: THE AMPN SET PROVIDES INFORMATION PERTAINING TO THE PASSAGE DESIGNATOR.

Note: THE AMPN SET IS MANDATORY IF FIELD 1 OF THE TRINST SET EQUALS “INFORM” OR “STOP”.

O VESC/_____/...../...../...../.....//

1 UNIT IDENTIFIER 2 NUMBER OF SHIPS 3 ARRIVAL COORDINATES 4 TIME OF ARRIVAL 5 LEAD THROUGH INSTRUCTIONS

M [1/30 ANBS] O [1-2 N] O [6/36 ANBS] O [8/11 AN]
O [4-6 A]

Set 16 Purpose: THE VESC SET PROVIDES INFORMATION ON A VESSEL OR CONVOY’S ESTIMATED TIME OF ARRIVAL IN THE VICINITY OF THE MINED AREA AND LEAD THROUGH INSTRUCTIONS.

C AMPN/_____//

1 FREE TEXT
M [1-U ANBS]

Set 17 Purpose: THE AMPN SET PROVIDES INFORMATION PERTAINING TO THE LEAD THROUGH INSTRUCTIONS IN SET VESC.

Note: THE AMPN SET IS MANDATORY IF FIELD 5 OF THE VESC SET EQUALS “INFORM” OR “STOP”.

O R SHIPDATA/...../...../...../.....//

1 NATIONALITY 2 SURFACE SHIP TYPE 3 SHIP NAME 4 INTERNATIONAL RADIO CALL SIGN

O [2 A] O [2-4 A] O [1-30 ANBS] O [3-9 AN]

Set 18 Purpose: THE SHIPDATA SET PROVIDES INFORMATION ON A SPECIFIC SHIP.

O COMMS/_____/_____/
_____R_____/.....R...../.....R...../
/

1 UNIT DESIGNATOR 2 SPECIFIC CALL SIGN 3 COMMUNICATIONS IDENTIFIER 4 COMMUNICATION PRIORITY 5 TRANSMISSION MODE
M [1/30 ANBS] M [1-38 ANBS] M [1/14 ANS]
O [1 A] O [2-9 AB]

Set 19 Purpose: THE COMMS SET PROVIDES COMMUNICATIONS INFORMATION.

O BDCT/_____/_____/
.....R...../.....R.....//
1 DAY-TIME SET WATCH 2 COMMUNICATIONS IDENTIFIER 3 DAY-TIME SHIFT WATCH 4 COMMUNICATIONS IDENTIFIER
M [7/8 AN] M [1/7 ANS] O [7/8 AN]
O [1/7 ANS]

Set 20 Purpose: THE BDCT SET PROVIDES COMMUNICATIONS BROADCAST INFORMATION TO TASKED UNITS.

O EMCON/_____R_____/_____R_____/
_____R_____//
1 EMISSION CONTROL PLAN IDENTIFIER 2 START TIME 3 STOP TIME
M [1/8 AN] M [7/8 AN] M [7/8 AN]

Set 21 Purpose: THE EMCON SET IDENTIFIES SPECIAL EMISSION CONTROL PROCEDURES OR CONDITIONS FOR THE MCM TASKING.

O EMCONFM/_____R_____/
_____R_____//
1 EMCON PLAN FORMAT IDENTIFIER 2 EQUIPMENT OR TACTICAL UNIT TYPE
M [1/3 A] M [1/30 ANBS]

Set 22 Purpose: THE EMCONFM SET PROVIDES INFORMATION ON THE EMISSION CONTROL (EMCON) PLAN FORMAT.

O EMCONPL/_____/
_____R_____/_____R_____//
1 EMISSION CONTROL PLAN DESIGNATION 2 FORMAT INDEX LETTER 3 RADIATION STATUS INDICATOR
M [4-14 AB] M [1-2 A]
M [3-5 AN]

Set 23 Purpose: THE EMCONPL SET PROVIDES INFORMATION ON THE EMISSION CONTROL (EMCON) PLAN INDICATORS.

O CODING/_____/_____R_____/
_____R_____/_____R_____//

1 PHONETIC ALPHABETIC IDENTIFIER 2 TYPE OF CODING 3 EFFECTIVE PUBLICATION 4 VERIFIED TIME OF CHANGE
M [4-8 A] M [9-14 AB] M [8-10 AN] M [6 AN]

Set 24 Purpose: THE CODING SET PROVIDES INFORMATION ON THE TYPE OF CODING TO BE USED.

O AREA/_____R_____//
1 AREA DESIGNATION OR COORDINATES
M [1/36 ANBS]

Set 25 Purpose: THE AREA SET DESCRIBES THE GEOGRAPHIC OPERATING AREA FOR THE MCM TASKING.

O CIRC/_____/_____R_____//
1 CENTER OF CIRCLE 2 CIRCLE RADIUS
M [1/36 ANBS] M [3-8 ANS]

Set 26 Purpose: THE CIRC SET DESCRIBES THE CIRCULAR OPERATING AREA FOR THE MCM TASKING.

O R MAP/_____/...../
.....R...../.....R...../.....R.....//
1 MAP OR CHART SERIES DESIGNATOR 2 MAP OR CHART SUFFIX NUMBER 3 MAP OR CHART SHEET NUMBER 4 MAP OR CHART EDITION NUMBER 5 GEODETIC DATUM
M [1-12 ANS] O [2 N] O [1-14 ANS] O [1-6 ANS] O [4-25 ANBS]

Set 27 Purpose: THE MAP SET PROVIDES THE MAP REFERENCES FOR THE MCM TASKING.

O DIVERT/.....R...../.....R.....//
1 DIVERSION LOCATION 2 VERIFIED COURSE WITH TENTHS OF A DEGREE
O [6/36 ANBS] O [5-7 ANS]

Set 28 Purpose: THE DIVERT SET PROVIDES DIVERSION INSTRUCTIONS.

O R ANCHOR/_____/...../
...../.....//

1 UNIT OR SHIP NAME 2 VERIFIED START DAY-TIME 3 VERIFIED END DAY-TIME 4 ANCHOR LOCATION
M [1/30 ANBS] O [8 AN] O [8 AN] O [6/36 ANBS]

Set 29 Purpose: THE ANCHOR SET PROVIDES ANCHOR INSTRUCTIONS TO TASKED UNITS.

O CVYORG/_____/_____/...../.....R.....//
1 CALL SIGN 2 SHIP NAME 3 ALTERNATE CALL SIGN 4 ALTERNATE SHIP NAME 5 SPECIFIC RADIO FREQUENCY
M [1/28 ANBS] M [1/30 ANBS] O [1/28 ANBS] O [1/30 ANBS] O [3-14 ANS]

Set 30 Purpose: THE CVYORG SET PROVIDES INFORMATION ON THE CONVOY ORGANIZATIONS.

O R DUTY/_____/_____R_____//
1 UNIT DESIGNATOR 2 TACTICAL DUTIES
M [1/38 ANBS] M [1/11 AN]

Set 31 Purpose: THE DUTY SET DESIGNATES A PARTICULAR UNIT AND ITS ASSIGNED TACTICAL DUTIES.

O GENTEXT/_____/_____//
1 GENTEXT TEXT INDICATOR 2 FREE TEXT
M [1-61 ANBS] M [1-U ANBS]

Set 32 Purpose: THE GENTEXT/ACTION ON COMPLETION SET PROVIDES INSTRUCTIONS AND DETAILS OF ACTION UPON COMPLETION OF DUTY.

Note: FIELD 1 OF THE GENTEXT SET MUST EQUAL “ACTION ON COMPLETION”.

O AKNLDG/_____/.....R.....//
1 ACKNOWLEDGEMENT REQUIREMENT INDICATOR 2 INSTRUCTIONS OR UNIT
M [2-3 A] O [1/50 ANBS]

Set 33 Purpose: THE AKNLDG SET PROVIDES OPERATOR ACKNOWLEDGEMENT AND NOT COMMUNICATIONS CENTER ACKNOWLEDGEMENT.

OPTASK MCM MESSAGE EXAMPLE:

EXER/SUN BIRD 93//
MSGID/OPTASK MCM/CTF 425//
MTASK/125B2/BRONNINGTON/82/ON/121345Z6/OFF/121800Z2//
MNOP/BRAVO/UNKNOWN/FOXTROT/21/UNKNOWN/GOLF/22//
MPARA/06/95.5/150M6/100M1/050M5//
MDA/SILVERPIT/514230N5-0023530E3/1ABC//
MTYPE/42/1ABCD//

MREPT/ADD/MLAYREP/141300Z9AUG//
CHANDAT/ZZ/531800N7-0041300E8/532600N6-0042400E0/035T8/7.5NM2/150M6
/040.2T6-10KTS1/131410Z0/131720Z4/85M3-N/090T9/18/900M9//
TRINST/LEAD/230535Z8/3KTS3/1000M1/2NM2/VEERE/3/HEIST/3//
VESC/ROTHMANS/12/514230N5-0023530E3/160730Z7/INFORM//

AMPN/PROCEED INDEPENDENTLY IN ACCORDANCE WITH PREVIOUS ORDERS//
SHIPDATA/CA/AM/CANBERRA/CMTW//
COMMS/UNIT:REEVES/DODGEFALLS/23HZ/P/CW/CH10/S/VHF//
BDCT/171200Z1/BCS:A2MX/171800Z7/BCS:S4CZ/180001Z0/123//
EMCON/ALFA/011201Z5/011300Z5/BRAVO/211300Z7/240600Z2//
EMCONFM/H/HYDROFOIL/52/RBOC//
EMCONPL/TANGO/A/15E/A/40P/M/97EB//
CODING/BRAVO/AUTHENTICATION/AGBD999Z/1201Z4//
AREA/523017N8-0024815W0/523219N2-0025012W0/523423N9-0024209W7//
MAP/DMA13142/14/13/MAY84/WGS 1984//

DIVERT/402100.5N2-0502000.4W1/350T8//
ANCHOR/TRUMP/250100Z8/251030Z1/512020N0-0111001E4//
CVYORG/BOSS/FALCONCREST/FOX/MCKINNLEY/156.7MHZ//
DUTY/MIDDLEBURG/7T//
GENTEXT/ACTION ON COMPLETION/PROCEED TO KOEGE FOR EMBARKATION OF CARGO
ZERO ONE EIGHT (018)//

4. Mining Report (MLAYREP)

MLAYREP MESSAGE TEXT FORMAT:

SEG OCC RPT SETID

C EXER/_____/.....//
1 EXERCISE NICKNAME 2 EXERCISE MESSAGE ADDITIONAL IDENTIFIER
M [1-56 ANBS] O [1-16 ANBS]

Set 1 Purpose: THE EXER SET PROVIDES THE DESIGNATED CODE NAME OR NICKNAME, IF THE MESSAGE SUPPORTS AN EXERCISE.

O OPER/_____/...../...../.....//
1 OPERATION CODEWORD 2 PLAN ORIGINATOR AND NUMBER 3 OPTION NICKNAME 4 SECONDARY OPTION NICKNAME
M [1-32 ANBS] O [1-23 ANS] O [1-23 ANBS] O [1-23 ANBS]

Set 2 Purpose: THE OPER SET PROVIDES THE DESIGNATED CODE NAME OR NICKNAME, IF THE MESSAGE SUPPORTS AN OPERATION.

M MSGID/_____/_____/
...../...../...../.....//
1 MESSAGE TEXT FORMAT IDENTIFIER 2 ORIGINATOR 3 MESSAGE SERIAL NUMBER 4 MONTH NAME 5 QUALIFIER 6 SERIAL NUMBER OF QUALIFIER
M [1-20 ANBS] M [1-30 ANBS] O [1-7 ANBS]
O [3 A] O [3 A] O [1-3 N]

Set 3 Purpose: THE MSGID SET PROVIDES THE MESSAGE IDENTIFICATION AND ORIGINATOR.

O R REF/_____/_____/_____/
_____/...../
...../.....R.....//
1 SERIAL LETTER 2 TYPE OF REFERENCE 3 ORIGINATOR 4 DATE AND/OR TIME OF REFERENCE 5 SERIAL NUMBER OF REFERENCE 6 SPECIAL NOTATION 7 SIC CODE OR FILING NUMBER
M [1 A] M [1/20 ANBS] M [1-30 ANBS] M [6/13 AN] O [1-10 ANBS] O [5 A] O [1/10 ANBS]

Set 4 Purpose: THE REF SET PROVIDES BOTH USMTF AND NON-USMTF REFERENCES.

C AMPN/_____//
1 FREE TEXT
M [1-U ANBS]

Set 5 Purpose: THE AMPN SET PROVIDES ADDITIONAL INFORMATION ON THE PRECEDING REF SET. ADDITIONALLY, THE AMPN SET PROVIDES IDENTIFYING INFORMATION FOR A NON-USMTF REFERENCE.

C NARR/_____//
1 FREE TEXT
M [1-U ANBS]

Set 6 Purpose: THE NARR SET PROVIDES ADDITIONAL INFORMATION ON THE PRECEDING TWO OR MORE REF SETS. ADDITIONALLY, THE NARR SET PROVIDES IDENTIFYING INFORMATION FOR NON-USMTF REFERENCES.

O MTASK/_____/_____/
...../.....R...../.....R.....//
1 MCM TASK ORDER NUMBER 2 UNIT OR SHIP TASKED 3 Q-ROUTE NUMBER OR MCM AREA NAME 4 TIME MODIFIER 5 VERIFIED EFFECTIVE TIME
M [5-6 AN] M [1/30 ANBS] O [1/20 ANBS] O [2-3 A] O [8/11 AN]

Set 7 Purpose: THE MTASK SET PROVIDES INFORMATION ON THE MINING TASK.

O R MLAID/_____/_____/
_____/.....R.....//
1 TASK NUMBER 2 NUMBER OF MINES LAID 3 VERIFIED MONTH DATE-TIME 4 MINELAY DEVIATION
M [1-2 N] M [1-3 N] M [11 AN] O [4-18 ANS]

Set 8 Purpose: THE MLAID SET PROVIDES INFORMATION ON THE MINES LAID.

O R MCASEPOS/...../
...../
...../...../.....R...../

1 MINE SEEDING INDICATOR 2 VERIFIED DELIVERY PLACEMENT ERROR IN NAUTICAL MILES 3 INTENDED DELIVERY POSITION 4 ACTUAL DELIVERY POSITION 5 DROP QUALITY

O [2 AN] O [4-8 ANS]
O [6/36 ANBS] O [6/36 ANBS] O [1-4 N]

Set 9 Purpose: THE MCASEPOS SET REPORTS INTENDED AND ACTUAL POSITION OF INDIVIDUAL MINES.

O R MLINE/_____/_____/.....R...../
/
1 MINE LINE SERIAL NUMBER 2 FIRST MINE POSITION 3 SUBSEQUENT MINE POSITION
M [1-2 N] M [6/36 ANBS] O [6/36 ANBS]

Set 10 Purpose: THE MLINE SET REPORTS THE POSITION INFORMATION ON MINE LINES.

O MFSTAT/_____/...../
...../...../
.....R.....//

1 PURPOSE OF MINEFIELD 2 MINEFIELD LIFE IN DAYS 3 PERCENTAGE OF MINEFIELD COMPLETED 4 THREAT IN PERCENT 5 MINEFIELD TARGET CATEGORY
M [8-9 A] O [1-3 N] O [1-3 N]
O [1-3 N] O [3 A]

Set 11 Purpose: THE MFSTAT SET PROVIDES INFORMATION ON THE MINEFIELD STATUS.

O AREA/_____R_____//
1 AREA DESIGNATION OR COORDINATES
M [1/36 ANBS]

Set 12 Purpose: THE AREA SET DESCRIBES THE GEOGRAPHIC OPERATING AREA FOR THE MINING MISSION.

O MAP/_____/...../
.....R...../.....R...../.....R.....//
1 MAP OR CHART SERIES DESIGNATOR 2 MAP OR CHART SUFFIX NUMBER 3 MAP OR CHART SHEET NUMBER 4 MAP OR CHART EDITION NUMBER 5 GEODETIC DATUM
M [1-12 ANS] O [2 N] O [1-14 ANS]
O [1-6 ANS] O [4-25 ANBS]

Set 13 Purpose: THE MAP SET PROVIDES THE MAP REFERENCES FOR THE MINE LAYING REPORT.

O R MLAVAIL/...../.....R.....//
1 NUMBER AND TYPE OF MINELAYING ASSETS 2 TYPE AND NUMBER OF MINES IN STOCK

O [3/6 AN] O [3/20 ANS]

Set 14 Purpose: THE MLAVAIL SET PROVIDES INFORMATION ON MINES IN STOCK AND MINELAYING FORCES AVAILABLE FOR MINELAYING TASKS.

O AKNLDG/_____/.....R...../.....//
1 ACKNOWLEDGEMENT REQUIREMENT INDICATOR 2 INSTRUCTIONS OR UNIT
M [2-3 A] O [1/50 ANBS]

Set 15 Purpose: THE AKNLDG SET PROVIDES OPERATOR ACKNOWLEDGEMENT AND NOT COMMUNICATIONS CENTER ACKNOWLEDGEMENT.

MLAYREP MESSAGE EXAMPLE:

EXER/SUNBIRD 93//
MSGID/MLAYREP/CTF 425//
MTASK/125B2/BRONNINGTON/82/ON/121345Z6/OFF/121800Z2//
MCASEPOS/IP/1NM1/211111N7-0582618W0/210201N6-0582618W0/34//
MLINE/2/211510N0-0152300W1/211520N1-0122310W9//
MFSTAT/TACTICAL/20/80/60/MER//
AREA/523017N8-0024815W0/523219N2-0034810W6/523423N9-0025209W8//
MAP/DMA13142/14/13/MAY84/WGS 1984//
MLAVAIL/1SS/MOORED-12//

5. Mining Tasking Report (OPTASK)

OPTASK MINING MESSAGE TEXT FORMAT:

SEG OCC RPT SETID

C
EXER/_____/.....//
1 EXERCISE NICKNAME 2 EXERCISE MESSAGE ADDITIONAL IDENTIFIER
M [1-56 ANBS] O [1-16 ANBS]

Set 1 Purpose: THE EXER SET PROVIDES THE DESIGNATED CODE NAME OR NICKNAME, IF THE MESSAGE SUPPORTS AN EXERCISE.

Note: THE EXER SET IS PROHIBITED IF THE OPER SET IS USED.

O
OPER/_____/...../
...../...../.....//
1 OPERATION CODEWORD 2 PLAN ORIGINATOR AND NUMBER 3 OPTION NICKNAME 4 SECONDARY OPTION NICKNAME
M [1-32 ANBS] O [1-23 ANS] O [1-23 ANBS] O [1-23 ANBS]

Set 2 Purpose: THE OPER SET PROVIDES THE DESIGNATED CODE NAME OR NICKNAME, IF THE MESSAGE SUPPORTS AN OPERATION.

Note: THE OPER SET IS PROHIBITED IF THE EXER SET IS USED.

M MSGID/_____/_____/
...../...../...../.....//

1 MESSAGE TEXT FORMAT IDENTIFIER 2 ORIGINATOR 3 MESSAGE SERIAL NUMBER 4 MONTH NAME 5 QUALIFIER 6 SERIAL NUMBER OF QUALIFIER
M [1-20 ANBS] M [1-30 ANBS] O [1-7 ANBS]
O [3 A] O [3 A] O [1-3 N]

Set 3 Purpose: THE MSGID SET PROVIDES THE MESSAGE IDENTIFICATION AND ORIGINATOR.

Note: FIELD 1 OF THE MSGID SET MUST EQUAL "OPTASK MINING".

O R REF/_____/_____/_____/
_____/...../...../
.....R.....//
1 SERIAL LETTER 2 TYPE OF REFERENCE 3 ORIGINATOR 4 DATE AND/OR TIME OF REFERENCE 5 SERIAL NUMBER OF REFERENCE 6 SPECIAL NOTATION 7 SIC CODE OR FILING NUMBER
M [1 A] M [1/20 ANBS] M [1-30 ANBS] M [6/13 AN]
O [1-10 ANBS] O [5 A] O [1/10 ANBS]

Set 4 Purpose: THE REF SET PROVIDES BOTH USMTF AND NON-USMTF REFERENCES.

C AMPN/_____//
1 FREE TEXT
M [1-U ANBS]

Set 5 Purpose: THE AMPN SET PROVIDES ADDITIONAL INFORMATION ON THE PRECEDING REF SET. ADDITIONALLY, THE AMPN SET PROVIDES IDENTIFYING INFORMATION FOR A NON-USMTF REFERENCE.

Note: THE AMPN SET IS MANDATORY IF FIELD 2 OF THE REF SET IS A COMMUNICATION TYPE AND ONLY ONE REFERENCE IS USED.

C NARR/_____//
1 FREE TEXT
M [1-U ANBS]

Set 6 Purpose: THE NARR SET PROVIDES ADDITIONAL INFORMATION ON THE PRECEDING TWO OR MORE REF SETS. ADDITIONALLY, THE NARR SET PROVIDES IDENTIFYING INFORMATION FOR NON-USMTF REFERENCES.

Note: THE NARR SET IS MANDATORY IF THE REF SET IS REPEATED ONE OR MORE TIMES AND FIELD 2 OF ONE OR MORE REF SETS CITES A COMMUNICATION TYPE.

O R MREPT/_____/
_____/.....//

1 REPORT MODIFICATION ACTION 2 MINE WARFARE REPORT OR SIGNAL CODE 3 VERIFIED TIME
M [3-6 A] M [3/13 ABS]
O [8/11 AN]

Set 7 Purpose: THE MREPT SET PROVIDES INFORMATION ON CHANGES FOR MINE WARFARE REPORTING REQUIREMENTS.

O MLORD/_____//
1 MINE LAYING ORDER NUMBER
M [3 N]

Set 8 Purpose: THE MLORD SET PROVIDES INFORMATION ON THE MINE LAYING ORDER.

O R MIREQNR/_____//
1 MINE REQUISITION NUMBER
M [3 N]

Set 9 Purpose: THE MIREQNR SET PROVIDES MINE REQUISITION INFORMATION.

O MINEOPS/...../...../
...../...../
...../...../
.....//

1 PURPOSE OF MINEFIELD 2 MINING OPERATION 3 MINEFIELD OBJECTIVE 4 MINEFIELD TARGET CATEGORY 5 MINEFIELD CONDITION AND VERIFIED TIME 6 DELIVERY METHOD AND VEHICLE 7 MINE TYPE
O [8-9 A] O [5-6 A] O [5-10 A] O [3 A] O [21-22 AN]
O [7/10 AS] O [1/15 ANS]

Set 10 Purpose: THE MINEOPS SET PROVIDES INFORMATION ON THE MINING OPERATION.

O R MFLD/_____/_____/
_____/_____R_____/
_____R_____/
_____R_____/_____R_____/_____R_____/
_____R_____//
1 MINEFIELD IDENTIFIER 2 MINE TYPE 3 NUMBER OF MINES TO BE LAID 4 MINEFIELD POSITION 5 VERIFIED MINE LINE ORIENTATION AND SPACING 6 VERIFIED DEPTH IN METERS OR FEET 7 ARMING DELAY 8 COUNT OF SHIPS 9 LAYING REFERENCE NUMBER (LRN)
M [1/20 ANBS] M [1/15 ANS] M [1-3 N]
M [6/36 ANBS] M [10-12 ANS] M [3-6 AN]
M [4/15 AN] M [1/5 NS] M [2-15 ANS]

Set 11 Purpose: THE MFLD SET PROVIDES INFORMATION ON THE PLANNED MINEFIELD.

O POMOE/_____/_____/
_____/_____/
_____/_____/
...../
...../...../
...../.....//

1 OBJECTIVE OF MINEFIELD 2 NAME OF SHIP CLASS 3 VERIFIED SPEED IN KNOTS 4 NAME OF SHIP CLASS 5 VERIFIED SPEED IN KNOTS 6 LEVEL OF EXPECTED COUNTERMEASURES 7 MMOE SIMPLE INITIAL THREAT PROBABILITY 8 AVERAGE NUMBER OF CASUALTIES 9 MMOE SUSTAINED THREAT PROBABILITY 10 PLANNED SUSTAINED THREAT OF MINEFIELD IN DAYS 11 EXPECTED NUMBER OF TRANSITORS

M [2-4 A] M [1-30 ANBS] M [5-8 ANS]
M [1-30 ANBS] M [5-8 ANS] M [4-8 A]
O [3 NS] O [4-6 AN]
O [3 NS] O [1-3 N]
O [1-4 N]

Set 12 Purpose: THE POMOE SET REPORTS PLANNING INFORMATION FOR MINEFIELDS.

O PERIOD/_____/_____/.....//

1 START TIME 2 STOP TIME 3 STOP TIME MODIFIER

M [7/11 AN] M [3/11 AN] C [7/11 AN]

Set 13 Purpose: THE PERIOD SET PROVIDES INFORMATION ON THE EFFECTIVE TIME PERIOD OF MINELAYING OPERATIONS.

O R COMMS/_____/_____/
_____R_____/.....R...../.....R.....//

1 UNIT DESIGNATOR 2 SPECIFIC CALL SIGN 3 COMMUNICATIONS IDENTIFIER 4 COMMUNICATION PRIORITY 5 TRANSMISSION MODE

M [1/30 ANBS] M [1-38 ANBS] M [1/14 ANS]
O [1 A] O [2-9 AB]

Set 14 Purpose: THE COMMS SET PROVIDES COMMUNICATIONS INFORMATION.

O BDCT/_____/_____/
.....R...../.....R.....//

1 DAY-TIME SET WATCH 2 COMMUNICATIONS IDENTIFIER 3 DAY-TIME SHIFT WATCH 4 COMMUNICATIONS IDENTIFIER

M [7/8 AN] M [1/7 ANS] O [7/8 AN]
O [1/7 ANS]

Set 15 Purpose: THE BDCT SET PROVIDES COMMUNICATIONS BROADCAST INFORMATION TO TASKED UNITS.

O EMCON/_____R_____/_____R_____/
_____R_____//
1 EMISSION CONTROL PLAN IDENTIFIER 2 START TIME 3 STOP TIME
M [1/8 AN] M [7/8 AN] M [7/8 AN]

Set 16 Purpose: THE EMCON SET IDENTIFIES SPECIAL EMISSION CONTROL PROCEDURES OR CONDITIONS FOR THE MINING TASKING.

O EMCONFM/_____R_____/
_____R_____//
1 EMCON PLAN FORMAT IDENTIFIER 2 EQUIPMENT OR TACTICAL UNIT TYPE
M[1/3 A] M [1/30 ANBS]

Set 17 Purpose: THE EMCONFM SET PROVIDES INFORMATION ON THE EMISSION CONTROL (EMCON) PLAN FORMAT.

O EMCONPL/_____/
_____R_____/_____R_____//
1 EMISSION CONTROL PLAN DESIGNATION 2 FORMAT INDEX LETTER
3 RADIATION STATUS INDICATOR
M [4-14 AB] M [1-2 A]
M [3-5 AN]

Set 18 Purpose: THE EMCONPL SET PROVIDES INFORMATION ON THE EMISSION CONTROL (EMCON) PLAN INDICATORS.

O AREA/_____R_____//
1 AREA DESIGNATION OR COORDINATES
M [1/36 ANBS]

Set 19 Purpose: THE AREA SET DESCRIBES THE GEOGRAPHIC OPERATING AREA FOR THE MINING TASKING.

O CIRC/_____/_____R_____//
1 CENTER OF CIRCLE 2 CIRCLE RADIUS
M [1/36 ANBS] M [3-8 ANS]

Set 20 Purpose: THE CIRC SET DESCRIBES THE CIRCULAR OPERATING AREA FOR THE MINING TASKING.

O MAP/_____/...../
.....R...../.....R...../
.....R.....//
1 MAP OR CHART SERIES DESIGNATOR 2 MAP OR CHART SUFFIX NUMBER 3 MAP OR CHART SHEET NUMBER 4 MAP OR CHART EDITION NUMBER 5 GEODETIC DATUM
M [1-12 ANS] O [2 N] O [1-14 ANS]
O [1-6 ANS] O [4-25 ANBS]

Set 21 Purpose: THE MAP SET PROVIDES THE MAP REFERENCES FOR THE MINING TASKING.

O R COTI/_____/_____//
1 START TIME OF MINE EMBARKATION 2 EMBARKATION HARBOR
M [4/11 AN] M [1-20 ANBS]

Set 22 Purpose: THE COTI SET PROVIDES INFORMATION FOR THE MINE EMBARKATION.

O MICA/_____R_____//
1 MINE CARGO DESIGNATION NUMBER
M [11-17 AS]

Set 23 Purpose: THE MICA SET PROVIDES INFORMATION ON MINE CARGO.

O COVER/_____R_____//
1 UNIT
M [1/30 ANB

Set 24 Purpose: THE COVER SET PROVIDES THE NAME OR DESIGNATOR OF THE FORCE PROVIDING COVER FOR THE OPERATION.

O FYFCE/_____/_____R_____/
_____R_____//
1 UNIT DESIGNATION 2 NUMBER OF COOPERATING FORCES 3 COOPERATING FORCE
M [1-30 ANBS] M [1-2 N] M [1/30 ANBS]

Set 25 Purpose: THE FYFCE SET IDENTIFIES THE FRIENDLY FORCES OPERATING IN THE MINING AREA.

O FYPOS/_____/_____/_____/
...../...../.....//
1 FRIENDLY UNIT 2 FRIENDLY FORCE LOCATION 3 TIME 4 COURSE AND SPEED 5 NATIONALITY 6 DISCRETE IDENTIFIER CODE
M [1/30 ANBS] M [1/36 ANBS] M [7/8 AN] O [7/10 ANS]
O [2 A] O [4 N]

Set 26 Purpose: THE FYPOS SET PROVIDES THE POSITION OF FRIENDLY FORCES IN THE MINING AREA.

O TACOM/_____/.....//
1 TACTICAL COMMAND AUTHORITY 2 VERIFIED MONTH DATE-TIME OF CHANGE
M [1-20 ANBS] O [11 AN]

Set 27 Purpose: THE TACOM SET PROVIDES THE TACTICAL COMMAND AUTHORITY INFORMATION.

O R SAIL/_____/_____/.....//
1 TIME OF ARRIVAL 2 POSITION 3 TIME OF DEPARTURE
M [8/11 AN] M [1/36 ANBS] O [8/11 AN]

Set 28 Purpose: THE SAIL SET PROVIDES THE SAILING INFORMATION.

O PIM/_____/_____/
_____R_____/_____R_____//
1 FORCE POSITION 2 VERIFIED DAY-TIME OF POSITION 3 VERIFIED COURSE AND SPEED OF FORCE 4 DURATION IN HOURS
M [6/36 ANBS] M [8 AN] M [11/16 ANS] M [2/11 ANS]

Set 29 Purpose: THE PIM SET PROVIDES THE POSITION AND INTENDED MOVEMENT (PIM) INFORMATION.

O R DUTY/_____/_____R_____//
1 UNIT DESIGNATOR 2 TACTICAL DUTIES
M [1/38 ANBS] M [1/11 AN]

Set 30 Purpose: THE DUTY SET DESIGNATES A PARTICULAR UNIT AND ITS ASSIGNED TACTICAL DUTIES.

O GENTEXT/_____/_____//
1 GENTEXT TEXT INDICATOR 2 FREE TEXT
M [1-61 ANBS] M [1-U ANBS]

Set 31 Purpose: THE GENTEXT/ACTION ON COMPLETION SET PROVIDES INSTRUCTIONS AND DETAILS OF ACTION UPON COMPLETION OF DUTY.

Note: FIELD 1 OF THE GENTEXT SET MUST EQUAL “ACTION ON COMPLETION”.

O AKNLDG/_____/.....R...../.....//
1 ACKNOWLEDGEMENT REQUIREMENT INDICATOR 2 INSTRUCTIONS OR UNIT
M [2-3 A] O [1/50 ANBS]

Set 32 Purpose: THE AKNLDG SET PROVIDES OPERATOR ACKNOWLEDGEMENT AND NOT COMMUNICATIONS CENTER ACKNOWLEDGEMENT.

OPTASK MINING MESSAGE EXAMPLE:

EXER/SUN BIRD 93//
MSGID/OPTASK MINING/CTF 425//
MREPT/ADD/MLAYREP/141300Z9AUG//
MLORD/001//
MIREQNR/001//
MINEOPS/TACTICAL/OVERT/BLOCKADE/MER/OPERATIONAL222000Z6SEP/AIR-FNU /MARKMOD55-2//
MFLD/IDCODE:US123499A1/GROUND/250/623115N8-0071824E2/050T5-200M2/50M5 /10DAY20HR30MIN/4/42BMW001-250//
POMOE/PC/ROMEO SSN/5KTS5/TANGO SSK/5KTS5/LIGHT/.50/5OF10/.45/30/12//
PERIOD/121900Z3MAY/151900Z6MAY//
COMMS/UNIT:REEVES/DODGEFALLS/23HZ/P/CW/CH10/S/VHF//
BDCT/171200Z1/BCS:A2MX/171800Z7/BCS:S4CZ/180001Z0/123//

EMCON/ALFA/011201Z5/011300Z5/BRAVO/211300Z7/240600Z2//
EMCONFM/H/HYDROFOL/52/RBOC//
EMCONPL/TANGO/A/15E/A/40P/M/97EB//
AREA/523017N8-0024815W0/523219N2-0025012W0/523423N9-0025209W8//
MAP/DMA13142/14/13/MAY84/WGS 1984//
COTI/121230Z9MAY/KOEGE//
MICA/ONE-SEVEN-TWO//
COVER/AVENGER/CTU71.1.2//
FYFCE/RESERVEMINEFOR/1/BRECON//
FYPOS/CTF313/421210N0-0071412W5/221530Z3/050T25KTS/SZ/4621//
TACOM/CTG420.5/221600Z1DEC//
SAIL/170930Z0/PLACE:ESJBERG/190800Z8//
PIM/552243N1-0024312W2/261330Z5/180T9-7KTS7/12HR3//

DUTY/MIDDLEBURG/3V//
GENTEXT/ACTION ON COMPLETION/PROCEED TO KOEGE FOR EMBARKATION OF
CARGO ZERO ONE EIGHT (018)//
AKNLDG/YES//

6. Unexploded Ordnance. The UXO spot report is a detailed, swift, two-way reporting system that makes clear where the UXO hazard areas are, what their priorities are, and which units are affected by them. The report is used to request help in handling a UXO hazard that is beyond a unit's ability to handle and that affects the unit's mission. This report helps the commander set priorities based on the battlefield situation.

a. The UXO spot report is the first echelon report that is sent when a UXO is encountered. Information about this report is also found in GTA 9-12-1 and in the supplemental information section of the signal operating instructions. The information must be sent by the fastest means available.

Line 1. Date-Time Group: DTG item discovered.

Line 2. Reporting Activity [unit identification code and location (grid of UXO)]

Line 3. Contact method: Radio frequency, call sign, point of contact, and telephone number.

Line 4. Type of Ordnance: Dropped, projected, placed, or thrown. If available, supply the subgroup. Give the number of items, if more than one.

Line 5. NBC Contamination: Be as specific as possible.

Line 6. Resources Threatened: Report any equipment, facilities, or other assets that are threatened.

Line 7. Impact on Mission: Provide a short description of your current tactical situation and how the presence of the UXO affects your status.

Line 8. Protective Measures: Describe any measures you have taken to protect personnel and equipment.

Line 9. Recommended Priority: Recommend a priority for response by EOD technicians or engineers.

REFERENCES

Joint Publications

JP 0-2, *Unified Action Armed Forces (UNAAF), 10 July 2001*

JP 1, *Joint Warfare of the Armed Forces of the United States, 14 November 2000*

JP 1-01, *Joint Doctrine Development System, 5 July 2000, CH 1, 29 June 2001*

JP 1-02, *DoD Dictionary of Military and Associated Terms, 12 April 2001*

JP 2-0, *Doctrine for Intelligence Support to Joint Operations, 9 March 2000*

JP 3-0, *Doctrine for Joint Operations, 1 February 1995*

JP 3-02, *Joint Doctrine for Amphibious Operations, 8 October 1992*

JP 3-02.1 T, *Joint Doctrine for Landing Force Operations, 1 November 1989*

JP 3-09.3, *Joint Tactics, Techniques, and Procedures for Close Air Support (CAS), 1 December 1995*

JP 3-15, *Joint Doctrine for Barriers, Obstacles, and Mine Warfare, 24 February 1999*

JP 3-17, *Joint Tactics, Techniques, and Procedures for Theater Airlift Operations, 18 July 1995*

JP 3-55, *Doctrine for Reconnaissance, Surveillance, and Target Acquisition Support for Joint Operations, 14 April 1993*

JP 4-0, *Doctrine for Logistics Support of Joint Operations, 6 April 2000*

JP 4-01.1, *Joint Tactics, Techniques, and Procedures for Airlift Support to Joint Operations, 20 July 1996*

JP 5-0, *Doctrine for Planning Joint Operations, 13 April 1995*

JP 5-00.2, *Joint Task Force (JTF) Planning Guidance and Procedures, 13 January 1999*

JP 6-0, *Doctrine for Command, Control, Communications, and Computer (C4) Systems Support to Joint Operations, 30 May 1995*

Universal Joint Task List, Office of the Chairman, The Joint Chiefs of Staff, CJCSM 3500.04B, *1 October 1999, CH 1, 1 November 1999*

Multiservice Publications

FM 3-100.38 (100-38)/MCRP 4-5.1/NWP TP 3-02.4.1/ACCPAM 10-752/PACAFPAM 10-752/USAFEPAM 10-752, *Multiservice Procedures For Operations In An Unexploded Ordnance Environment, July 1996*

FM 100-27/AFM 2-50-USA/USAF, *Doctrine for Joint Airborne and Tactical Airlift Operations, March 1985*

FM 3-52.1 (100-103-1)/MCRP 3-25D/NTTP 3-52.1(A)/AFTTP(I) 3-2.16, *Multiservice Procedures for Integrated Combat Airspace Command and Control, March 1994*

FM 3-52.2 (100-103-2)/MCWP 3-25.2/NWP 3-56.2/AFTTP(I) 3-2.17, *The Theater Air-Ground System (TAGS), July 1998*

US Army Publications

FM 3-0 (100-5), *Operations, 14 June 2001*

FM 3-04.100 (1-100), *Army Aviation Operations, 21 February 1997*

FM 3-04.111 (1-111), *Aviation Brigades, 27 October 1997*

FM 3-04.112 (1-112), *Attack Helicopter Operations, 2 April 1997*

FM 3-05.30 (33-1), *Psychological Operations, 19 June 2000*

FM 3-34.225 (5-71-100), *Division Engineer Combat Operations, 22 April 1993, CH 1, 1 March 2000*

FM 3-34 (5-100), *Engineer Combat Operations, 27 February 1996*

FM 3-09 (6-20), *Doctrine for Fire Support, 17 May 1988*

FM 3-09.21 (6-20-1), *Tactics, Techniques, and Procedures for the Field Artillery Battalion, 22 March 2001*

FM 3-09.22 (6-20-2), *Tactics, Techniques, and Procedures for Corps Artillery, Division Artillery, and Field Artillery Brigade Operations, 7 January 1993*

FM 3-60 (6-20-10), *Tactics, Techniques, and Procedures for the Targeting Process, 8 May 1996*

FM 3-09.5 (6-20-30), *Tactics, Techniques, and Procedures for Fire Support for Corps and Division Operations, 18 October 1989*

FM 3-09.4 (6-20-40), *Tactics, Techniques, and Procedures for Fire Support for Brigade Operations (Heavy), 5 January 1990*

FM 4-20 (10-1), *Quartermaster Principles, 11 August 1994*

FM 6-02 (24-1), *Signal Support to Army Operations (Draft)*

FM 2-0 (34-1), *Intelligence and Electronic Warfare Operations, 27 September 1994*

FM 2-33.4 (34-2), *Collection Management and Synchronization Planning, 8 March 1994*

FM 3-51.80 (34-80), *Battalion and Brigade Intelligence and Electronic Warfare Operations, 15 April 1986*

FM 2-01.3 (34-130), *Intelligence Preparation of the Battlefield, 8 July 1994*

FM 3-01 (44-100), *US Army Air and Missile Defense Operations, 15 June 2000*

FM 4-93.30 (54-30), *Corps Support Groups, 17 June 1993*

FM 4-01 (55-1), *Transportation Operations, 3 October 1995*

FM 4-93.1 (63-1), *Support Battalions and Squadrons, Separate Brigades and Armored Cavalry Regiment, 30 September 1993*

FM 4-93.3 (63-3), *Corps Support Command, 30 September 1993*

FM 4-93.20 (63-20), *Forward Support Battalion, 26 February 1990*

FM 3-90.2 (71-2), *The Tank and Mechanized Infantry Battalion Task Force, 27 September 1988, CH 1, 17 August 1994*

FM 3-100.71 (71-100), *Division Operations, 28 August 1996*

FM 3-93 (100-7), *Decisive Force: The Army in Theater Operations, 31 May 1995*

FM 3-16 (100-8), *The Army in Multinational Operations, 24 November 1997*

FM 3-100.15 (100-15), *Corps Operations, 29 October 1996*

FM 3-100.16 (100-16), *Army Operational Support, 31 May 1995*

FM 1-02 (101-5-1), *Operational Terms and Graphics, 30 September 1997*

4th PSYOP Group, *PSOP, Version 1.1, 15 July, 1999*

US Marine Corps Publications

MCDP 1, *Warfighting, 20 June 1997*

MCDP 1-2, *Campaigning, 1 August 1997*

MCDP 2, *Intelligence, 7 June 1997*

MCDP 3, *Expeditionary Operations, 16 April 1998*

MCDP 4, *Logistics, 21 February 1997*

MCDP 5, *Planning, 21 July 1997*

MCDP 6, *Command and Control, 4 October 1996*

MCWP 0-1.1, *Componency, 5 June 1998*

MCWP 2-1, *Intelligence Operations, February 1998*

MCWP 3-2, *Aviation Operations, 9 May 2000*

MCWP 3-16, *Fire Support Coordination for Ground Combat Element, May 1999*

MCWP 3-17, *Engineer Operations, 14 February 2000*

MCWP 3-25, *Control of Aircraft and Missiles, 28 February 1998*

MCWP 4-1, *Logistics Operations, 15 April 1999*

MCWP 5-1, *Marine Corps Planning Process, 5 January 2000*

MCWP 6-22, *Communications and Information Systems, 16 November 1998*

MCRP 5-12C, *Marine Corps Supplement to the DoD Dictionary, 23 July 1998*

MCRP 5-12D, *Organization of Marine Corps Forces, 13 October 1998*

Joint Forces Staff College

JFSC Publication 1, *The Joint Staff Officer's Guide 2000.*

JFSC *Joint Capabilities and Limitations Handbook, November 2000*

Miscellaneous Publications

Cline, Lieutenant Colonel Robert A., "MLRS in USMC Operations," *Field Artillery*, October 1994

Gibbons, Lieutenant Colonel, "Logistical Support for the FA Brigade," *Field Artillery*, October 1991, pp. 36-41

G3 Battle Book, US Army Command and General Staff College

G4 Battle Book, US Army Command and General Staff College

Fundamentals of Tactical Operations, US Army Command and General Staff College

Kind, Major General Peter S., "Army Tactical C2 System," *Military Review*, July 1990, pp. 35-41

"Actions of the 1st (Tiger) Brigade, 2d Armored Division During Operation Desert Shield/ Storm, 10 Aug 90-1 Mat 91," US Army, March 1991

GLOSSARY

PART I - ABBREVIATIONS AND ACRONYMS

A

A2C2	Army airspace command and control	II-9
AADC	area air defense commander	VIII-2
AAFES	Army and Air Force Exchange System	IX-13
AAGS	Army Air-Ground System	VII-28
AAV	assault amphibious vehicle	I-7
AAW	antiair warfare	VII-13
ABME	air battle management element	VIII-13
ABMOC	air battle management operations center	VIII-11
AC/S	assistant chief of staff	III-7
ACA	airspace coordination area	VII-5
ACE	aviation combat element	I-4
ACM	airspace control measure	VII-5
ACO	airspace control order	VII-5
ACP	air control points	VII-5
ACR	armored cavalry regiment	VIII-8
ACT	analysis control team	III-4
ADA	air defense artillery	VII-6
ADADO	assistant division air defense officer	VIII-9
ADAM	area denial artillary munitions	V-11
ADF	automatic direction finder	VII-21
ADMIN	administration	III-7
ADMIN/LOG	administration and logistics	VII-30
ADP	automated data processing	VII-6
ADW	air defense warning	VIII-11
AE	assault echelon	IX-19
AFATDS	Advanced Field Artillery Tactical Data System	II-8
AFOE	assault follow on echelon	IX-19
AI	air interdiction	VII-16
ALO	air liaison officer	II-8
ALOC	air lines of communication	IX-13
AMCI	Army and Marine Corps Integration	II-4
AMDCOORD	air and missile defense coordinator	VIII-11
AMMO	Ammunition	IX-7
AO	area of operation	II-9
AOR	area of responsibility	I-5
APAM	antipersonnel and antimateriel	V-11
APC	armored personnel carrier	VI-2
APDS	armor piercing discarding sabot	IV-2
ARFOR	Army Forces	III-4
ARNG	Army National Guard	VIII-7
ASAS	all source analysis system	II-7
ASB	aviation support battalion	VII-4
ASC(A)	assault support coordinator (airborne)	VII-19

ASL	authorized stockage list	IX-5
ASLT	air support liaison team	V-6
ASOC	air support operations center	VII-25
ASP	ammunition supply point	VII-5
ATACMS	Army Tactical Missile System	V-4
ATCCS	Army Tactical Command and Control System	II-7
ATHS	Airborne Target Handover System	V-4
ATO	air tasking order	VII-6
ATP	ammunition transfer point	IX-3
ATS	air traffic service	VII-6
AUTODIN	automatic digital network	II-14
AVIM	aviation intermediate maintenance company	VII-2
AVLB	armored vehicle launched bridge	I-8
AVUM	aviation unit maintenance	VII-2
AW	all weather	I-6
AWACS	Airborne Warning and Control System	VIII-11

B

BCD	battlefield coordination detachment	VII-24
BDA	battle damage assessment	III-1
Bde	brigade	IX-15
BFV	Bradley fighting vehicle	IV-2
BGen	Brigadier General (USMC)	IX-15
BLT	battalion landing team	V-15
Bn	battalion	II-6
BP	battle position	VII-5
BSA	brigade support area	II-16
BSFV	Bradley Stinger Fighting Vehicle	VIII-7
BSSG	Brigade Service Support Group (USMC)	I-5

C

C2	command and control	I-1
C3	command, control, and communications	II-1
C3I	command, control, communications, and intelligence	VIII-11
C4	command, control, communications, and computers	II-1
C4I	command, control, communications, computers, and intelligence	VIII-1
CA	civil affairs	A-4
CAPT	Captain	IX-15
CAS	close air support	V-14
CB	counterbattery	III-10
CBCS	Cannon Battery Computer System	V-4
CCIS	common channel interswitch signaling	II-14
CCR	closed circuit refuel	VII-5
CE	command element	I-4
CEB	combat engineer battalion	VI-3
CENTCOM	Central Command	A-4

CEV	combat engineer vehicle	VI-2
CF	command fire	V-15
CFM	cubic feet per minute	VI-4
cgo	cargo	IX-3
CI	counterintelligence	III-2
CINC	Commander in Chief	I-5
CM	cruise missile	VIII-8
CMCC	Corps Movement Control Center	IX-11
CMMC	Corps Materiel Management Center	IX-11
CMO	civil military operations	A-4
CMOC	civil military operations center	A-5
CNR	combat net radio	II-15
CO	company	II-15
COCOM	combatant command	II-1
COL	Colonel	IX-15
COLT	combat observation and lasing team	III-3
COMM	communications	II-15
COMSEC	communications security	II-11
CONPLAN	operation plan in concept format	II-16
CONUS	Continental United States	VII-12
COSCOM	corps support command	I-2
CP	command post	II-5
CS	combat support	I-2
CSA	corps support area	IX-12
CSAR	combat search and rescue	IX-28
CSB	corps support battalion	IX-7
CSG	corps support group	IX-4
CSP	contingency support package	IX-19
CSR	controlled supply rate	V-14
CSS	combat service support	I-2
CSSCS	Combat Service Support Control System	II-8
CSSD	combat service support detachment	IX-15
CSSE	combat service support element	I-4
cu	cubic	VI-6
CUL	common user logistics	IX-19
CVRT	criticality, vulnerability, recuperability, and the threat	VIII-4

D

DAO	division ammunition office	IX-5
DAS	deep air support	VII-15
DASC	direct air support center	V-6
DASC(A)	direct air support center (airborne)	VII-23
DCS	Defense Communications System	II-13
DEPMEDS	Deployable Medical Systems	IX-28
Det	detachment	I-6
DFSCOORD	Deputy Fire Support Coordinator	V-1
DIBITS	digital in-band interswitch trunk signaling	II-17
DISCOM	division support command	VII-5

DLA	Defense Logistics Agency	IX-19
DMMC	Division Materiel Management Center	IX-5
DNVT	digital nonsecure voice terminal	II-14
DOD	Department of Defense	VII-29
DODAC	Department of Defense Acquisition Code	IX-12
DPICM	dual-purpose improved conventional munition	V-11
DS	direct support	II-2
DSN	defense switched network	II-17
DSSCS	Defense Special Security Communication System	II-14
DSVT	digital subscriber voice terminal	II-14
DTG	date time group	II-14
DZ	drop zone	VI-8

E

EA	engagement area	VII-11
EAC	echelon above corps	II-8
EAF	expeditionary airfield	IX-17
EEM	early entry module	IX-6
ENGR	engineer	VI-8
EOD	explosive ordnance detachment	VI-8
EPLRS	Enhanced Position Location Reporting System	VIII-11
EPW	enemy prisoner of war	III-8
EPW/CI POB	enemy prisoner of war and civilian internee psychological battalion	A-5
ESB	engineer support battalion	VI-7
EUCOM	European Command	A-4
EW	electronic warfare	I-4
EW/C	early warning/control	VII-13

F

FA	field artillery	V-1
FAA	forward assembly area	VII-18
FAAD	forward area air defense	II-8
FAAD C3I	Forward Area Air Defense, Command, Control Communication and Intelligence System	II-7
FAADS	Forward Area Air Defense System	II-7
FAC	forward air controller	II-5
FAC(A)	forward air controller (airborne)	V-8
FACP	forward air control party	VII-18
FAE	fuel air explosive	VII-22
FARP	forward air refueling point	VII-2
FAX	facsimile	II-11
FD	fire direction	V-15
FDC	fire direction center	V-3
FEBA	forward edge of the battle area	II-9
FFAR	folding fin aerial rocket	VII-24
FFCC	Force Fires Coordination Center	II-5

FISP	fly-in support package	IX-19
FIST	fire support team	III-9
FIST-V	fire support team vehicle	V-2
FLIR	forward looking infrared	VII-21
FLOT	forward line of troops	II-9
FLTSATCOM	fleet satellite communications	II-14
FM	Field Manual	I-2
FM	frequency modulation	II-11
FMCC	force movement control center	VII-29
FO	forward observer	V-2
FSB	forward support battalion	II-10
FSC	fire support coordinator (USMC)	II-8
FSCC	fire support coordination center	II-8
FSCL	fire support coordination line	VI-11
FSCMs	fire support coordination measures	V-1
FSCOORD	fire support coordinator	II-8
FSE	fire support element	II-5
FSO	fire support officer	V-1
FSS	fire support section	V-10
FSSG	Force Service Support Group	I-5
FST	forward surgical team	IX-3
ft.	feet	VI-6

G

G-2	Army or Marine Corps component intelligence staff officer (Army division or higher staff, Marine Corps brigade or higher staff)	II-6
G/VLLD	ground/vehicular laser locator designator	V-2
gal	gallon	IV-2
GCEs	ground combat elements	I-4
GENSER	general service	II-14
GLID	ground laser identifier	VII-2
GMF	greatly modulated frequency	II-17
GPM	gallons per minute	IX-9
GS	general support	II-2
GSM	ground station module	III-9
GSR	general support reinforcing	V-9
GSR	ground surveillance radar	III-3

H

H&S	Headquarters and Service	IX-15
HA	holding area	VII-8
HARM	high-speed anti-radiation missile	VII-21
HC	high concentrate	V-11
HE	high explosive	IV-3
HEI-T	high explosive incendiary-tracer	IV-2

HEMATs	heavy expanded mobility ammunition trailers	V-4
HEMTTs	heavy expanded mobility tactical trucks	V-4
HERS	Helicopter Expedient Refueling System	VI-6
HF	high frequency	II-14
HHB	headquarters and headquarters battery	V-1
HHC	headquarters and headquarters company	II-10
HHD	headquarters and headquarters detachment	IX-2
HHQ	higher headquarters	II-16
HIDACZ	high density aircraft control zone	VII-5
HIMAD	high-to-medium altitude air defense	I-9
HLZ	helicopter landing zone	VI-8
HMH	Marine heavy helicopter squadron	B-3
HMLA	Marine light/attack helicopter squadron	B-3
HMM	Marine medium helicopter squadron	B-3
HMMWV	high mobility multipurpose wheeled vehicle	IV-2
HN	host nation	IX-4
HPT	high payoff target	VII-9
HST	helicopter support team	VII-18
HUMINT	human intelligence	III-7
hvy	heavy	IX-3
HWY	highway	IV-2

I

IAW	in accordance with	II-16
ICP	intertheater communications security package	II-16
ID	identification	VII-14
IEW	intelligence and electronic warfare	II-7
IFF	identification friend or foe	VII-5
IFSAS	Interim Fire Support Automation System	V-4
ILL	illumination	IV-3
ILS	Instrument Landing System	VII-21
Inf	infantry	IV-15
INS	Inertial Navigation System	VII-21
Intel	intelligence	II-5
IPB	intelligence preparation of the battlespace	III-1
IR	infrared	VII-4
ISR	intelligence, surveillance, and reconnaissance	I-4
IT	interrogator-translator team	III-8

J

J-2	intelligence directorate of a joint staff	III-5
JAOC	joint air operations center	VII-24
JCEOI	joint communications-electronics operating instructions	II-16
JCSAR	joint combat search and rescue	VII-11
JDISS	Joint Deployable Intelligence Support System	III-10
JFACC	joint force air component commander	VII-29
JFC	joint force commander	II-1

JIC	Joint Intelligence Center	III-5
JMC	joint movement center	VII-29
JOA	joint operations area	II-16
JP	Joint Publication	I-1
JPOTF	joint psychological operations task force	A-5
J-SEAD	joint suppression of enemy air defense	VII-7
JSOI	joint signal operating instructions	II-16
JSOTF	joint special operations task force	A-5
J-STARS	Joint Surveillance Target Attack Radar System	III-4
JTAR	joint tactical air strike request	VII-27
JTF HQ	Joint Task Force Headquarters	I-5
JTIDS	Joint Tactical Information Distribution System	VIII-11
JTSA	Joint Theater Support Area	IX-12
JWICS	Joint World Wide Intelligence Communications System	III-10

K

kbps	kilobits per second	II-17
kHz	kilohertz	II-16
kmph	kilometers per hour	IV-6

L

LAAD	low altitude air defense	VII-14
LAN	local area network	II-11
LAR	light armored reconnaissance	III-10
LAV	light armored vehicle	I-7
LEN	large extension node	II-14
LMT	limit	VI-7
LNOs	liaison officers	II-4
LOCs	lines of communication	I-4
LOS	line of sight	II-14
LRSD	long-range surveillance detachment	III-3
LTC	Lieutenant Colonel	IX-15
LtCol	Lieutenant Colonel (USMC)	IX-15
LVS	Logistics Vehicle System	IX-20
LVTP	landing vehicle tracked personnel (See AAV)	IV-9
LZ	landing zone	VII-9

M

M	meter	IV-2
MACCS	Marine Air Command and Control System	V-7
MACG	Marine Air Control Group	I-7
MAG	Marine Aircraft Group	I-5
MAGTFs	Marine Air-Ground Task Forces	I-1
MALS	Marine Aviation Logistics Squadron	IX-17
MALSP	Marine Corps Aviation Logistics Support Program	IX-19
MANPADS	Man-Portable Air Defense System	VIII-7

MARDIVs	Marine divisions	I-4
MATCD	Marine air traffic control detachment	VII-18
MAWs	Marine aircraft wing	I-5
MCDP	Marine Corps doctrinal publication	IV-8
MCLC	mine clearing line charge	VI-2
MCRP	Marine Corps Reference Publication	VIII-1
MCS	Maneuver Control System	II-7
MCSSD	mobile combat service support detachment	IX-15
MCWP	Marine Corps Warfighting Publication	III-1
MCX	Marine Corps Exchange	IX-13
MEB	Marine Expeditionary Brigade	I-1
Mech	mechanized	IV-15
MEF	Marine Expeditionary Force	I-1
METT-T	mission, enemy, terrain and weather, troops and support available, and time available	I-2
METT-TC	mission, enemy, terrain and weather, troops and support available,time available, and civil considerations	I-2
MEU	Marine Expeditionary Unit	I-5
MEU (SOC)	Marine Expeditionary Unit Special Operations Capable	III-7
MFWPU	medium freshwater purification unit	VI-6
MG	machine gun	IV-2
MGen	Major General (USMC)	IX-15
MI	military intelligence	II-5
MLRS	Multiple Launch Rocket System	I-3
MOOTW	military operations other than war	B-2
MOU	memorandum of understanding	IX-24
MOUT	military operations on urbanized terrain	IV-11
MP	military police	III-3
MPF	maritime prepositioning force	I-1
MPPWCOM	military police prisoner of war command	A-5
MPS	Maritime Pre-positioning Ships	IX-19
MPSRON	Marine Pre-positioning Ship Squadron	IX-20
MRE	meals ready-to-eat	IX-12
MSB	main support battalion	IX-4
MSC	major subordinate command	II-14
MSE	mobile subscriber equipment	II-11
MSRT	mobile subscriber radio terminal	II-18
MSSG	Marine Expeditionary Unit Service Support Group (MAGTF)	I-5
MST	maintenance support team	IX-3
MTACS	Marine Tactical Air Command Squadron	I-7
MWHS	Marine wing headquarters squadron	B-3
MWR	morale, welfare, recreation	IX-13
MWSG	Marine wing support group	IX-17
MWSS	Marine wing support squadron	VI-4

N

NAVFAC	Naval Facility	IX-12
NBC	nuclear, biological, chemical	I-8
NCF	naval construction force	VI-8
NCO	noncommissioned officer	V-2
NCS	net control station	II-15
NEO	noncombatant evacuation operations	B-2
NEXCOM	Navy Exchange Service Command	IX-13
NGF	naval gunfire	V-7
NICP	National Inventory Control Point	IX-25
NM	nautical mile	VIII-13
NMCB	naval mobile construction battalion	VI-8
NSFS	naval surface fire support	V-15
NSN	national stock number	IX-24
NTS	Naval Telecommunications System	II-13
NTS	Night Targeting System	VII-22

O

O&I	operations and intelligence	VII-30
OAAW	offensive antiair warfare	VII-14
OAS	offensive air support	VII-13
OH	observation helicopters	III-3
OPCON	operational control	II-1
OPS	operations	III-7
OR	operating room	IX-3

P

PACOM	Pacific Command	A-4
PDB	psychological dissemination battalion	A-5
PIR	priority intelligence requirements	III-2
PLL	prescribed load list	IX-3
PLS	Palletized Loading System	IX-3
PLT	platoon	III-7
PMCS	preventive maintenance checks and services	V-13
POL	petroleum, oils, lubricants	VI-8
POTF	psychological operations task force	A-5
PSYOP	psychological operations	A-5

Q

QTY	quantity	VI-4

R

R	reinforcing	V-9
R&S	reconnaissance and surveillance	III-3
RAAM	remote anti-armor mine	V-11
RAP	rocket-assisted projectile	V-11

RAU	remote access unit	II-11
RC	reserve component	A-4
RECCE	reconnaissance	VII-21
Regt	Regiment	IX-15
RLT	regimental landing team	IX-15
RMC	remote multiplayer combiner	II-18
ROWPU	reverse osmosis water purification unit	VI-6
ROZ	restricted operations zone	VII-5
RRP	Rearm/Refuel Point	IX-26
RSO	Reception, Staging, and Onward Movement	IX-6
RX	repairable exchange	IX-3

S

S1	manpower staff officer	II-10
S2	intelligence staff officer	II-8
S3	operations staff officer	II-8
SAAFR	standard Army aviation flight route	VII-5
SAAM	special assignment airlift mission	VII-29
SACC	supporting arms coordination center	V-15
SADC	Sector Air Defense Commander	VII-14
SADF	Sector Air Defense Facility	VIII-12
SAM	surface-to-air missile	VIII-13
SATCOM	satellite communications	II-14
SC	single channel	II-11
SCI	sensitive compartmented information	III-4
SCR	single channel radio	II-15
SEAD	suppression of enemy air defense	II-8
SEAL	sea-air-land	B-4
SEE	small equipment excavator	VI-2
SEMA	special electronic mission aircraft	VII-1
SEN	small extension node	II-14
SFCP	shore fire control party	V-7
SHF	super high frequency	II-14
SHORAD	short range air defense	I-9
SHTU	simplified handheld terminal unit	VIII-12
SIGINT	signals intelligence	III-7
SINCGARS	Signal Channel Ground and Airborne Radio System	II-16
SIR	specific information requirements	III-3
SIXCON	six containers together	VI-6
SMFT	Semitrailer Mounted Fabric Tank	IX-9
SOC	special operations capable	III-7
SOF	special operations forces	VII-33
SOP	standard operating procedure	II-7
SOR	specific orders and requests	III-3
SOTAC	special operations terminal attack controller	VII-33
SOUTHCOM	Southern Command	A-4
SP	self-propelled	IV-15
SPT	support	III-7

SPIRIT	Special Purpose Integrated Remote Intelligence Terminal	III-4
SPMAGTF	Special Purpose Marine Air Ground Task Force	VIII-13
SPOD	seaport of debarkation	IX-25
SSO	special security officer	III-7
STON	short ton	IX-3
STU-III	secure telephone unit III	II-14
SVML	standard vehicle mounted launcher	VIII-8

T

TAA	tactical assembly area	VII-8
TAC	tactical air coordinator	II-5
TAC(A)	tactical air coordinator (airborne)	VII-19
TACAN	tactical air navigation	VII-21
TACON	tactical control	II-1
TACPs	tactical air control parties	V-5
TACS	Theater Air Control System	VII-24
TACSAT	tactical satellite	II-11
TAD	tactical air direction	VII-15
TAFDS	Tactical Airfield Fuel Dispensing System	VI-6
TALO	theater airlift liaison officer	VI-29
TAOC	tactical air operations center (USMC)	VII-8
TAR/HR	tactical air request/helicopter request	VII-15
TAVB	Aviation Logistics Support Ship	IX-20
TBMD	theater ballistic missile defense	VII-14
TBP	to be published	IV-9
TCF	tactical combat force	VII-3
TCU	transportable computer unit	VIII-11
TEK	trunk encryption key	II-16
TEP	task execution plan	II-17
TF	task force	IV-1
TM	team	VII-20
TOC	tactical operations center	II-9
TOP	Theater Opening Package	IX-6
TOT	time-on-target	VII-26
TOW	tube-launched optically tracked wire-guided	IV-2
TPB	tactical psychological battalion	A-5
TPC	tactical psychological company	A-5
TPD	tactical psychological detachment	A-5
TPDD	tactical psychological development detachment	A-5
TPT	tactical petroleum terminal	IX-25
TRAM	tractor, rubber-tire articulating, mobile	VI-4
TRANSPORT	transportation	VI-5
TRAP	tactical recovery of aircraft and personnel	VII-16
TRI-TAC	tri-service tactical communications program	II-17
Trk	truck	IX-3
TSB	transport support battalion (USMC)	B-3

TSC	Theater Support Command	IX-6
TSK	transmission security key	II-16
TTP	tactics, techniques, and procedures	II-4

U

UAV	unmanned aerial vehicle	I-7
UHF	ultra high frequency	II-14
ULCS	unit level circuit switches	II-14
UNAAF	Unified Action Armed Forces	II-1
US	United States	VI-12
USA	United States Army	I-1
USACE	United States Army Corps of Engineers	IX-12
USAF	United States Air Force	II-8
USAR	United States Army Reserve	A-4
USJFC	United States Joint Forces Command	A-4
USMC	United States Marine Corps	I-1
USMTF	United States message text format	VII-27
USN	United States Navy	I-9
UXO	unexploded ordnance	V-14

V

VHF	very high frequency	II-14
VMA	Marine attack squadron (fixed wing)	B-3
VMAQ	Marine tactical electronic warfare squadron	I-6
VMFA	Marine fighter attack squadron (fixed wing)	B-3
VMGR	Marine aerial refueler transport squadron	B-3
VMU	Marine unmanned aerial vehicle squadron	I-7

W

WAN	wide area network	II-11
WCS	weapons control status	VII-10
WP	white phosphate	IV-3

X

XCTRY	cross-country	IV-2
XO	executive officer	II-10

Y

yd	yard	VI-4

PART II—TERMS AND DEFINITIONS

airborne operation. An operation involving the air movement into an objective area of combat forces and their logistic support for execution of a tactical or a strategic mission. The means employed may be any combination of airborne units, air transportable units, and types of transport aircraft, depending on the mission and the overall situation.

amphibious operation. An attack launched from the sea by naval and landing forces, embarked in ships or craft involving a landing on a hostile or potentially hostile shore. As an entity, the amphibious operation includes the following phases:

a. Planning—The period extending form issuance of the initiating directive to embarkation.

b. Embarkation—The period during which the forces, with their equipment and supplies, are embarked in the assigned shipping.

c. Rehearsal—The period during which the prospective operation is rehearsed for the purpose of—

(1) Testing adequacy of plans, the timing of detailed operations, and the combat readiness of participating force

(2) Ensuring that all echelons are familiar with plans

(3) Testing communications.

d. Movement—The period during which various components of the amphibious task force move from points of embarkation to the objective area.

e. Assault—The period between the arrival of the major assault forces of the amphibious tasks force in the objective area and the accomplishment of the amphibious task force mission.
(Joint Pub 1-02)

augmentation. Augmentation is a command relationship. Units that are designated to augment another force are therefore not available to the losing command for the period of augmentation.

combined arms team. Two or more arms mutually supporting one another, usually consisting of infantry, armor, cavalry, aviation, field artillery, air defense artillery, and engineers.

commander, amphibious task force. The US Navy officer designated in the initiating directive as commander of the amphibious task force. Also called CATF. (Joint Pub 1-02)

common servicing. That function performed by one Military Service in support of another Military Service for which reimbursement is not required from the Service receiving support. (Joint Pub 1-02)

connectivity. The exchange of information by electronic means.

cross servicing. That function performed by one Military Service in support of another Military Service for which reimbursement is required from the Service receiving support. (Joint Pub 1-02)

decisive point.

1. A point, if retained, that provides a commander with a marked advantage over his opponent. Decisive points are usually geographic in nature but could include other physical elements, such as enemy formations, command posts, and communication nodes.

2. A time or location where enemy weakness is positioned that allows overwhelming combat power to be generated against it. It could be an enemy weakness to be exploited or a time when the combat potential of the enemy force is degraded.

force multiplier. A capability that, when added to and employed by a combat force, significantly increases the combat potential of that force and thus enhances the probability of successful mission accomplishment. (Joint Pub 1-02)

force protection. Security program designed to protect service members, civilian employees, family members, facilities, and equipment, in all locations and situations, accomplished through planned and integrated application of combating terrorism, physical security, operations security, personal protective services, and supported by intelligence, counterintelligence, and other security programs. (Joint Pub 1-02)

forcible entry. The seizing and holding of a military lodgment in the face of armed opposition.

intelligence preparation of the battlespace. An analytical methodology employed to reduce uncertainties concerning the enemy, environment, and terrain for all types of operations. Intelligence preparation of the battlespace builds an extensive data base for each potential area in which a unit may be required to operate. The data base is then analyzed in detail to determine the impact of the enemy, environment, and terrain on operations and presents it in graphic form. Intelligence preparation of the battlespace is a continuing process. Also called IPB. (Joint Pub 1-02)

joint operations area. An area of land, sea, and airspace, defined by a geographic combatant commander or subordinate unified commander, in which a joint force commander (normally a joint task force commander) conducts military operations to accomplish a specific mission. Joint operations areas are particularly useful when operations are limited in scope and geographic area or when operations are to be conducted on the boundaries between theaters. Also called JOA (Joint Pub 1-02)

joint servicing. That function performed by a jointly staffed and financed activity in support of two or more Military Services. (Joint Pub 1-02)

joint targeting coordination board. A group formed by the joint force commander to accomplish broad targeting oversight functions that may include but are not limited to coordinating targeting information, providing targeting guidance and priorities, and preparing and/or refining joint target lists. The board is normally comprised of representatives form the joint force staff, all components, and if required, component subordinate units. Also called JTCB. (Joint Pub 1-02)

over-the-horizon amphibious operation. An operational initiative launched form beyond visual and radar range of the shoreline. (Joint Pub 1-02)

seize. A tactical task to clear a designated area and obtain control of it.

service component command. A command consisting of the Service component commander and all those Service forces, such as individuals, units, detachments, organizations and installations under the command, including the support forces that have been assigned to a combatant command or further assigned to a subordinate unified command or joint task force. (Joint Pub 1-02)

supporting arms. Weapons and weapons systems of all types employed to support forces by indirect fire. (Joint Pub 1-02)

supporting forces. Forces stationed in or to be deployed to an operational area to provide support for the execution of an operation order. Combatant command (command authority) of supporting forces is not passed to the supported commander. (Joint Pub 1-02)

synchronization. 1. The arrangement of military actions in time, space, and purpose to produce maximum relative combat power at a decisive place and time. 2. In the intelligence context, application of intelligence sources and methods in concert with the operational plan. (Joint Pub 1-02)

target. 1. A geographical area, complex, or installation planned for capture or destruction by military forces. 2. In intelligence usage, a country, area, installation, agency, or person against which intelligence operations are directed. 3. An area designated and numbered for future firing. 4. In gunfire support usage, an impact burst which hits the target. (Joint Pub 1-02)

target analysis. An examination of potential targets to determine military importance, priority of attack, and weapons required to obtain a desired level of damage or casualties. (Joint Pub 1-02)

targeting. 1. The process of selecting targets and matching the appropriate response to them, taking account of operational requirements and capabilities. 2. The analysis of enemy situations relative to the commander's mission, objectives, and capabilities at the commander's disposal, to identify and nominate specific

vulnerabilities that, if exploited, will accomplish the commander's purpose through delaying, disrupting, disabling, or destroying enemy forces or resources critical to the enemy. (Joint Pub 1-02)

task-organizing: The act of designing an operating force, support staff, or logistic package of specified size and composition to meet a unique task or mission. Characteristics to examine when task-organizing the force include, but are not limited to: training, experience, equipage, sustainability, operating environment, enemy threat, and mobility. (Joint Pub 3-05)

vertical envelopment. A tactical maneuver in which troops, either air-dropped or air-landed, attack the rear and flanks of a force, in effect cutting off or encircling the force. (Joint Pub 1-02)

INDEX

A

A2C2 II-9, VII-6, VII-7, VII-9, VII-25, VIII-5, VIII-6, VIII-12
AADC VIII-2, VIII-4
AAFES IX-13
AAGS VII-28
AAV I-7, IV-6, IV-8, IV-9, IV-14, IV-15, IV-17, B-3, B-4
AAW VII-13, VII-14, VII-18, VII-21, VII-22, VIII-12, VIII-13
ABME VIII-11
ABMOC VIII-12
ACA VII-5, VIII-6
ACE I-4, I-5, I-7, II-5, II-6, III-6, III-8, V-6, V-7, V-8, V-14, V-8, VI-3, VI-4, VI-5, VI-8, VI-9, VI-10, VII-12, VII-13, VII-14, VII-17, VII-18, VII-19, VII-25, VIII-12, VIII-13, IX-16, IX-17, IX-18, IX-19, IX-20, IX-21, B-3, B-5
ACM VII-5, VII-6, VII-7, VII-11
ACO VII-5, VIII-5
ACP VII-5
ACR VIII-8, A-2, A-6
ACT III-4
ADA VII-6, VII-9, VII-10, VIII-3, VIII-5, VIII-6, VIII-7, VIII-8, VIII-9, VIII-10, VIII-11, A-3
ADADO VIII-9
ADMIN/LOG VII-30
ADP VII-6, IX-15
Administration and Logistics *See* ADMIN/LOG
Advanced field artillery tactical data system *See* AFATDS
ADW VIII-11
AE IX-19
AFATDS II-8, V-4
AFOE IX-19
AI VII-16, VII-26, VII-27
Air and missile defense VIII-1, VIII-2, VIII-4, VIII-5, VIII-7, VIII-11, VIII-12, VIII-13
  AAW VIII-13
  AAW surveillance and control systems VIII-13
  ACE VIII-12
  Active VIII-2
  Army defense operations VIII-7
  Avenger VIII-8
  Bradley Linebacker VIII-7
  C4I System VIII-2
  CM VIII-8
  command and control VIII-12
    divisional air defense units VIII-10
  command relationships VIII-2
  control measures VIII-5
  Corps air defense brigade organization VIII-10
  cruise missiles VIII-8
  integrated Army and Marine Corps operations VIII-1
  MAGTF organizations VIII-13
  MEB VIII-13
  MEB - Corps liaison requirements VIII-5
  MEB operations VIII-12
  MEF VIII-5, VIII-13
  Notional Army brigade VIII-7
    MEF liaison requirements VIII-5
  ADA organization VIII-9
  equipment VIII-7
  operations VIII-1, VIII-11
  passive VIII-2
  patriot VIII-9
  sensors VIII-8
  standard vehicle mounted launcher VIII-8
  stinger/MANPADS VIII-8
  SVML VIII-8
  tactical missions VIII-3
  UAV VIII-8
Air and missile defense coordinator *See* AMDCOORD
Air battle management element *See* ABME
Air battle management operations center *See* ABMOC
Air control points *See* ADPs
Air corridors, air control point VII-5 *See* ACP

Air defense artillery *See* ADA
Air defense officer *See* ADADO
Air defense warning *See* ADW
Air interdiction *See* AI
Air liaison officer *See* ALO
Air lines of communication *See* ALOC
Air support
    operations center *See* ASOC
    requests for VII-18
Air support liaison team *See* ASLT
Air tasking order *See* ATO
Air traffic services *See* ATS
Air transport IX-21
Airborne target handover system *See* ATHS
Airborne warning and control system *See* AWACS
Airlift support
    request channels VII-28
    request for VII-28, VII-29
Airspace control measures *See* ACM
Airspace control order *See* ACO
Airspace coordination areas *See* ACA
All source analysis system *See* ASAS
all-source intelligence III-6
All weather *See* AW
ALO II-8, II-9, V-2, V-5, VII-6, VII-7, VII-26, VII-27
ALOC IX-13, IX-27
ALSA VI-11
AMCI I-8, II-4, II-15, II-18, III-8, IV-10, IV-11, IV-12, IV-13, IV-14, VII-1, VII-2, VII-24, VII-30, IX-1
AMCI
    intelligence operations III-8
    operations complementary capabilities (Attack) IV-11
    operations complementary capabilities (amphib operations/ passage of lines) IV-10
    operations complementary capabilities (breaching/river crossing operations) IV-12
    operations complementary capabilities (defend) IV-13
    operations complementary capabilities (movement to contact) IV-11
    operations complementary capabilities (retrograde) IV-14
AMDCOORD VIII-11
Ammunition company (DS) major equipment IX-10
Ammunition transfer point *See* ATP
Analysis and control team *See* ACT
Antiair warfare *See* AAW
Antiaircraft warfare tasks
    asset capabilities VII-14
AO II-9, II-10, III-5, III-8, VII-7, VII-19, VII-25, VII-26, VII-27, IX-2, IX-4, IX-12, IX-26
AOR I-5, II-1
Area air defense commander *See* AADC
Area of operation *See* AO
area of responsibility *See* AOR
ARFOR III-4, III-5
Armor, assault amphibious vehicle I-7
Armored cavalry regiment A-2
Armored cavalry regiments *See* ACR
Army – Marine Corps Integration I-8
Army ADA weapons
    types and capabilities VIII-7
Army air-ground system *See* AAGS
Army airspace command and control *See* A2C2
Army aviation
    aircraft capabilities and limitations VII-23
    capabilities and limitations VII-4
    communications equipment summary VII-31
    missions VII-3
    task force (possible) VII-2
Army and Air Force exchange system *See* AAFES
Army and Marine Corps integration *See* AMCI
Army aviation task force VII-2
Army fire support coordination organizations and coordinators V-1
Army National Guard *See* ARNG
Army tactical C2 system *See* ATCCS
Army tactical missile system *See* ATACMS
ARNG VIII-7, VIII-10
ASAS II-7, III-4, III-10
ASB VII-4

ASC(A) VII-19
ASL IX-13, IX-27
ASLT V-6
ASOC VII-27
ASP VII-5, IX-10, IX-12
Assault amphibious vehicle *See* AAV
Assault echelon *See* AE
Assault follow on echelon *See* AFOE
Assault support
  Requests for VII-17
Assault support coordinators (airborne) *See* ASC(A)
Authorized stockage list *See* ASL
ATACMS V-4, V-11, VII-6, A-3
ATCCS II-7
ATHS V-4
ATO VII-6, VII-23, VII-27, VII-29
ATP IX-3, IX-10, IX-12, IX-13, IX-26
ATS VII-6, VII-7
Automated data processing *See* ADP
Aviation I-2, I-3, I-4, I-6, I-9, 1-10, II-5, II-6, II-8, II-9, III-8, IV-4, IV-9, IV-11, IV-13, IV-14, V-5, V-6, V-7, V-11, V-14, VI-5, VII-1, VII-2, VII-3, VII-4, VII-5, VII-6, VII-7, VII-8, VII-9, VII-10, VII-11, VII-12, VII-13, VII-14, VII-17, VII-18, VII-22, VII-23, VII-29, VII-30, VII-31, VIII-12, IX-5, IX-11, IX-13, IX-14, IX-16, IX-17, IX-18, IX-19, IX-20, IX-22, A-2, B-3
  Aircraft VII-2
  Army aircraft capabilities and limitations VII-23
  Army aviation overview VII-1
  Army capabilities and limitations VII-4
  Army concept VII-1
  Army missions VII-3
  Army task force VII-2
  deep operations GO/NO-GO planning matrix VII-9
  Marine functions VII-13
  Notional Army brigade augmentation VII-1
  operations
    Close VII-3
    Deep VII-3
    Rear VII-3
  US Army/USMC air operations connectivity VII-25
Aviation combat element *See* ACE
Aviation Combat Element Logistics Organization IX-18
Aviation intermediate maintenance *See* AVIM
Aviation support battalion *See* ASB
Aviation unit maintenance *See* AVUM
AVIM VII-2, VII-4, VII-7, IX-13, IX-14
AVUM VII-2, VII-5, IX-13, IX-14
AW I-6, B-3
AWACS VIII-11, VIII-12

B

Battalion landing team *See* BLT
Battle damage assessment *See* BDA
Battlefield coordination detachment *See* BCD
Battlespace III-1, IX-28
BCD VII-24, VII-29
BDA III-1, III-3
BFV IV-2, IV-17, VIII-8
BLT V-15, IX-15
BN II-6, IV-2, IV-3, V-10, V-11, VI-8, VI-9, VI-10, VII-13, VII-16, VIII-6, A-4
BP VII-5, VII-7, VII-8, VII-11
Brigade service support group *See* BSSG
Brigade support area *See* BSA
BSA II-16, IX-12, IX-24
BSFV VIII-7, VIII-8, VIII-9
BSSG I-5, I-6, II-6, VI-7, IX-7, IX-15, IX-16, IX-17, IX-19, IX-20, IX-21, IX-22, IX-23, IX- 25, IX-26, IX-27, IX-28, IX-29

C

C2 I-1, I-4, I-6, I-8, I-9, I-10, II-1, II-3, II-5, II-6, II-7, II-8, II-9, II-10, II-12, II-15, II-16, IV-1, IV-2, IV-3, IV-4, IV-8, IV-10, IV-12, V-2, V-3, V-4, V-6, V-12, VI-1, VI-2, VII-2, VII-3, VII-5, VII-12, VII-14, VII-19, VII-23, VII-29, VII-30, VIII-11, VIII-12, IX-4, IX-7, IX-8, IX-15, IX-21, IX-22, IX-23, IX-31, A-2, A-3, A-4, A-6, A-7

C3 II-1, II-8, V-4, A-3
C3I II-7, VIII-11
C4 II-1, II-13
C4I VIII-1, VIII-2, VIII-5, VIII-9, VIII-11, A-7
CA A-4, A-5
Cannon battery computer system *See* CBCS
Capabilities and limitations of the MEB I-8
CAS V-14, VII-2, VII-15, VII-16, VII-17, VII-18, VII-19, VII-21, VII-22, VII-26, VII-27
  CAS/Air interdiction (AI) support request channels VII-26
  immediate request channels VII-27
CBCS V-4
CCIS II-14, II-17, II-18
CE I-4, I-5, I-6, II-13, II-14, II-18, III-6, V-8, V-6, VI-3, VII-18, VII-19, B-2, B-4
CEB VI-3
CENTCOM A-4
Central Command *See* CENTCOM
CF V-15
CGS V-4
CI III-2, III-5, III-7, III-8, A-5
CINC I-5, A-5
Civil military operations *See* CMO center *See* CMOC
Close air support *See* CAS
Close air support (CAS) request procedures VII-16
CMMC IX-11, IX-24, IX-25, IX-27
CMO A-4, A-5
CMOC A-5
CMs VIII-8, VIII-9
CNR II-15
COCOM II-1, II-2, IX-1
COLT III-3, V-2, V-3, V-5
Combat engineer battalion *See* CEB
Combat net radio *See* CNR
Combat observation and lasing team *See* COLT
Combat search and rescue *See* CSAR
Combat service support *See* CSS
Combat service support control system *See* CSSCS
Combat service support element *See* CSSE
Combat service support organizations IX-15
Combat support *See* CS
Combatant command *See* COCOM
Command and control *See* C2, II-1
Command, control and communications system *See* C3
Command, control, communications, computers and intelligence See C4I
Command element *See* CE
Command fire *See* CF
Command liaison II-5
Command post *See* CP
Command relationships II-1
Commander in Chief *See* CINC
Common user logistics *See* CUL
Communications and electronic intelligence *See* EA-6B
Communications security *See* COMSEC
Communications systems available from Marine Corps II-15
COMSEC II-11, II-15, II-16, II-18, IX-3, IX-5
CONPLAN II-16
Continental United States *See* CONUS
Contingency support package *See* CSP
Control, communications, and computer system II-1
CONUS VII-12, IX-12, IX-13, IX-19
Corps ADA brigade organization VIII-10
Corps artillery I-2
Corps direct support (DS) supply capabilities IX-9
Corps material management center See CMMC
Corps storage area *See* CSA
Corps support battalion *See* CSB
Corps support command *See* COSCOM
Corps support group *See* CSG
COSCOM I-2, IX-6, IX-23, IX-24, IX-26, A-6
Counterintelligence *See* CI
Countermobility tasks VI-9
CP II-5, II-9, II-10, II-8, II-12, IV-5, V-1, V-2, VII-3, VII-11

Criticality, vulnerability, recuperability, and the threat *See* CVRT
Cruise missiles *See* CM
CS I-2, I-4, I-5, I-8, II-9, II-10, IV-4, IV-5, IV-8, IV-14, V-4, V-6, VI-12, VII-2, VII-3, VII-11, VIII-7, A-1, A-4, A-6
CSA IX-12
CSAR VII-17, IX-28
CSB IX-8, IX-22, IX-28, IX-29
CSG IX-4, IX-5, IX-6, IX-7, IX-8, IX-12, IX-13, IX-14, IX-21, IX-24, IX-25, IX-26, IX-27, IX-28, IX-29
CSP IX-19
CSR V-14, IX-12
CSS I-2, I-5, II-7, II-9, II-10, IV-5, IV-14, V-4, V-5, V-11, VI-10, VI-12, VII-2, VII-3, VII-4, VII-5, VII-11, VIII-7, IX-15, IX-17, IX-20, A-1, A-2, A-4, A-6
CSSCS II-8
CSSD IX-15, IX-17, IX-24, IX-26, IX-28
CSSE I-4, I-5, I-7, III-6, VI-3, VI-5, VI-8, VI-9, VI-10, VII-21, VII-22, VII-25, IX-15, IX-24, B-1, B-3, B-5
CUL IX-19
CVRT VIII-4
CYZ-10 II-16

D

DAO IX-5
DAS VII-15, VII-16, VII-21, VII-22
DASC I-7, V-6, V-8, VII-13, VII-14, VII-15, VII-16, VII-17, VII-18, VII-19, VII-23, VII-25, VII-26, VIII-6
DASC(A) VII-23, VII-25
DCS II-13, II-14
Data transfer service *See* CYZ-10
Deep air support *See* DAS
Defense communications system *See* DCS
Defense Logistics Agency *See* DLA
Department of Defense *See* DOD
Department of Defense acquisition code *See* DODAC
Deployable medical systems *See* DEPMEDS
DEPMEDS IX-28
Deputy fire support coordinator *See* DFSCOOD
Direct support *See* DS
DFSCOORD V-1
Digital nonsecure voice terminal *See* DNVT
Digital subscriber voice terminal *See* DSVT
Direct air support center *See* DASC
Direct air support center (airborne) *See* DASC(A)
Dissemination measures between Corps and MEB VIII-6
Dissemination measures between the MEF and notional Army brigade VIII-6
Division ammunition office *See* DAO
Division's materiel management center *See* DMMC
DLA IX-19, IX-27
DMMC IX-5
DNVT II-18
DOD VII-29, IX-1, IX-2, IX-12
DODAC IX-12, IX-24
DS II-2, II-13, II-14, II-15, III-3, III-4, V-2, V-3, V-7, V-9, V-10, V-14, V-16, V-17, VI-10, VII-5, VIII-3, VIII-9, IX-3, IX-4, IX-5, IX-6, IX-8, IX-9, IX-10, IX-11, IX-13, IX-14, IX-19, IX-22, IX-23
DS MI III-3, III-4
DSVT II-18

E

EAs VII-11
EA-6B I-7, III-8, IV-17, VII-21, VII-32
EAC II-8, VI-1, VIII-6, IX-5, A-3, A-6
EAC/Corps IX-5
EAF IX-17
Early entry module *See* EEM
EAS VII-11
EB VI-4
Echelon above corps *See* EAC
EEM IX-6
Electronic warfare *See* EW
Enemy prisoner of war *See* EPW
Enemy prisoner of war and civilian internee PSYOP battalion *See* EPW/CI POB

Engagement areas *See* EAs
Engineer
ACE VI-4
countermobility tasks VI-9
GCE VI-3
explosive ordnance disposal *See* EOD
general tasks VI-10
integrated operations VI-8
MEB operations VI-2
MWSS equipment VI-5
notional Army brigade operations VI-1
operations VI-1
support battalion *See* ESB
survivability tasks VI-9
terminology VI-1
Enhanced position location reporting system *See* EPLRS
EOD VI-12, C-26
EPLRS VIII-11
EPW III-8, IV-4, IX-28, IX-29, A-5
EPW/CI POB A-5
ESB VI-7
EUCOM A-4
European Command *See* EUCOM
EW I-4, I-8, I-9, I-10, II-7, III-3, III-7, III-9, III-10, IV-11, V-5, V-8, VII-3, VII-7, VII-13, VII-14, VII-15, VII-17, VIII-9, VIII-12, VIII-13
Executive officer *See* XO
Expeditionary airfield *See* EAF

F

FA V-1, V-10, V-13, V-17, VII-10
FAA VII-8, VII-10
FAAD II-8, VIII-8, VIII-11
FAAD C3I II-7
FAAD C4I VIII-9
FAC II-5, III-8, V-8, V-11, VII-15, VII-16, VII-18, VII-19, VII-26, VII-27, VII-33
FAC(A) V-8, V-11, VII-19, VII-25
FACP VII-18, VII-19, VII-25
FARP VII-2, VII-5, VII-7, VII-8, VII-10
FD V-15
FDC V-3, V-4
FEBA II-9, VII-8, VII-9
FFAR VII-24
FFCC II-5, V-8, V-15, VII-13, VII-25
Field artillery *See* FA
Fire direction *See* FD
Fire direction center *See* FDC
Fire power comparison of MLRS and 155mm Howitzer V-4
Fire support I-9, I-10, II-5, II-6, II-7, II-8, II-9, IV-6, V-1, V-2, V-3, V-4, V-6, V-7, V-8, V-9, V-15, V-17, VI-10, VI-11, VII-2, VII-7, VII-10, VII-13, VII-23, VII-24, VII, 27, VII-30, IX-5, A-7
Army coordination V-1
coordinating measures *See* FSCM
FSCM V-1
fundamentals V-9
integrated operations V-8
MEB operations V-6
naval surface V-7
notional Army brigade attack assets V-3
officers *See* FSO
operations V-1
team *See* FIST
team vehicle *See* FIST-V
Fire support coordination center *See* FSCC
Fire support coordination line *See* FSCL
Fire support element *See* FSE
Fire support fundamentals V-9
FISP IX-19, IX-20
FIST V-1, V-2, V-5, V-10, V-15, VII-33
FIST-V V-2, V-3
FLIR VII-21, VIII-8
FLOT II-9, V-13, V-14, VII-5, VII-10
FMCC VII-29
FO V-2
Folding fin aerial rockets *See* FFAR
Force fires coordination center *See* FFCC
Force movement control center See FMCC
Force service support group *See* FSSG
Forward air controller *See* FAC
Forward air controllers (airborne) *See* FAC(A)
Forward air control party *See* FACP
Forward area air defense command, control, communications *See* FAAD

Forward arming and refueling point *See* FARP
Forward assembly area *See* FAA
Forward edge of the battle area *See* FEBA
Forward line of own troops *See* FLOT
Forward support battalion *See* FSB
Forward surgical team *See* FST
FSB II-10, VII-2, IX-2, IX-3, IX-4, IX-6, IX-12, IX-13, IX-14, IX-15, IX-22, IX-23, IX-24, IX-25, IX-27, IX-28
supply company capabilities/major equipment IX-3
FSC II-8, V-1, V-6, V-9, VII-26, VII-27
FSCC II-5, II-6, V-6, V-7, V-8, V-15, VII-18, VII-19, VII-25, VII-26
FSCL VI-11, VII-9, VII-15
FSCMs V-1, VII-11
FSCOORD II-8, V-1, V-2, VII-26
FSE II-5, II-6, V-1, V-2, V-3, V-15, VII-24, VII-25, VII-26
FSO V-1, V-2, VII-6, VII-10, VII-26, VII-27
FSS V-10
FSSG I-5, II-5, VI-7, IX-6, IX-7, IX-13, IX-14, IX-15, IX-20, IX-21, IX-22, IX-24, IX-25, IX-27, IX-28, B-2, B-3
FST IX-3

G

G-2 II-5, III-5, III-6, III-7, A-3
G3 II-5, II-6, VII-26, VII-27, A-3
G/VLLD V-2
GCE I-4, I-5, I-6, II-3, II-5, II-6, II-15, III-6, III-8, IV-6, IV-9, IV-14, IV-15, V-6, V-7, V-8, V-15, V-16, V-17, VI-3, VI-4, VI-8, VI-9, VI-10, VII-14, VII-18, VII-25, IX-16, IX-20, B-2, B-4
General engineering tasks VI-10
General support *See* GS
General support reinforcing *See* GSR
GLID VII-2
GMF II-17
Greatly modulated frequency *See* GMF
Ground combat elements *See* GCE
Ground laser identifiers VII-2
Ground station module *See* GSM
Ground surveillance radar *See* GSR
Ground/vehicular laser locator designator *See* G/VLLD
GS II-2, V-7, V-9, V-12, V-16, V-17, VI-10, VIII-3, VIII-9, IX-4, IX-6, IX-15, IX-20
GSM III-9
GSR III-3, III-4, III-5, V-9, V-12, V-16, V-17, VIII-3

H

H&S IX-15, IX-16
HA VII-8, VII-10
Headquarters and service *See* H&S
Headquarters battery *See* HHB
Heavy armored cavalry regiment A-2
Heavy expanded mobility ammunition trailer *See* HEMAT
Heavy expanded mobility tactical truck *See* HEMTT
Helicopter request *See* HR
Helicopter support team *See* HST
HEMAT V-4
HEMTT V-4, V-5, VI-2, IX-12
HF II-14, II-15, II-16, V-12, V-15, V-16, V-17, VII-22, VII-31, VII-32, VII-33
HHB V-1, V-3
HHC II-10, IV-1, IV-2, IV-3, IV-4, VI-1, VI-2, IX-7, A-4
HHD IX-2, IX-22
HHQ II-16
HIDACZ VII-5
High density aircraft control zones *See* HIDACZ
High to medium altitude air defense *See* HIMAD
High-mobility multipurpose wheeled vehicles *See* HMMWV
Higher headquarters *See* HHQ
HIMAD I-9, I-10, VIII-7, VIII-11, VIII-12
HMLA B-3, B-5
HMH B-3, B-5
HMM B-3, B-5
HMMWV IV-2, IV-3, V-5, VI-2, VI-4, VIII-5, VIII-8, VIII-13, IX-3, IX-5
HN IX-4, IX-19
Holding areas *See* HA
Host nation *See* HN
HR VII-15

HST VII-18, VII-19, VII-20
HUMINT III-7, III-8, V-8

I

ICP COMSEC II-16
ICP II-16, II-18
Identification friend or foe *See* IFF
IEW II-7
IFF VII-5, VIII-1, VIII-5, VIII-8
IFSAS V-4
Illustrative class III consumption rates IX-26
Infrared *See* IR
Inherent responsibilities of air defense standard tactical missions VIII-3
Inherent responsibilities of artillery standard tactical missions V-10
Intelligence and electronic warfare *See* IEW
Intelligence and reconnaissance units/ assets III-6
Intelligence battalion II-5, II-6, III-7 capabilities III-8
Intelligence staff officer *See* S2
Interim fire support automation system *See* IFSAS
Intertheater communications security packages *See* ICPs
IPB III-1, III-2, IV-5, VIII-4, VIII-5
IR VII-4
IT Plt III-8

J

J-2 III-5
J-SEAD VII-7
JAOC VII-24, VII-25, VII-26, VII-27, VII-28, VII-29
JCEOI II-16
JCSAR VII-11
JDISS III-10
JFACC VII-25, VII-29
JFC II-1, II-2, II-3, III-1, V-8, VI-11, VII-23, VII-24, VII-25, VII-29, VIII-2, VIII-4, IX-1, IX-30, A-4, B-4
JIC III-5
JMC VII-28, VII-29
JOA II-16, IX-1, IX-31
Joint air operations center *See* JAOC
Joint combat search and rescue *See* JCSAR
Joint communications-electronic operating instructions *See* JCEOI
Joint deployable intelligence support system *See* JDISS
Joint force air component commander *See* JFACC
Joint intelligence center *See* JIC
Joint movement center *See* JMC
Joint operations area *See* JOA
Joint publication *See* JP
Joint special operations task force *See* JSOTF
Joint signal operating instructions *See* JSOI
Joint suppression of enemy air defense *See* J-SEAD
Joint surveillance target attack radar system *See* J-STARS
Joint tactical air strike request *See* JTAR
Joint tactical information distribution system *See* JTIDS
Joint Task Force Headquarters *See* JTF HQ
Joint theater storage area *See* JTSA
Joint world wide intelligence communications system *See* JWICS
JP I-1, II-1, II-2, III-1, VI-1, VI-11, VII-5, VII-12, VII-27, VIII-1, VIII-5, IX-1, IX-2, IX-12, IX-21
JSOI II-16
JSOTF A-5
J-STARS III-4, III-5, III-8, III-9, V-4
JTAR VII-27
JTF I-5, II-16, III-5, A-1, A-5
JTF HQ I-5
JTIDS VIII-11
JTSA IX-12, IX-26
JWICS III-10

L

LAAD VII-13, VII-14, VIII-6, VIII-13, VIII-14, B-4
LAN II-11, II-14
Landing zone *See* LZ
LAR III-10, IV-8, IV-9, V-7, VII-18, B-3, B-4

LAV I-7, IV-15, IV-17
Liaison officers *See* LNOs
Liaison requirements
from Corps to MEB II-6
from MEB to Corps II-6
from MEF to notional Army brigade II-5
from notional Army brigade to MEF II-5
Light armored reconnaissance *See* LAR
Light armored vehicle *See* LAV
Line of sight *See* LOS
Lines of communication *See* LOC
LNOs II-4, VII-6, VIII-6, VIII-11
Local area network *See* LAN
LOC I-4, IV-14, VII-4, VII-11, VII-17
Logistics IX-1
ACE support IX-17
authority for IX-1
aviation combat element organization IX-18
C2 Notional Army brigade under MEF IX-22
common user logistics *See* CUL
defense logistic agency *See* DLA
forward support battalion IX-2
integrated IX-21
joint logistics functions IX-2
MEB IX-1
MEB operations IX-19
MEF IX-6
MEF organizations IX-14
MSB augmentation IX-5
notional Army brigade IX-1, IX-2
operations IX-12
status reporting IX-30
vehicle system *See* LVS
Long-range surveillance detachments *See* LRSD
LOS II-14, II-17, II-18, VIII-13, VIII-14
LRSD III-3
LVS IX-20
LZ VII-9

M

M1064A3 (120mm) mortar characteristics IV-3
M1 M2 Abrams tanks characteristics IV-4, IV-8
M1A1 IV-8, IV-15
M2 Bradley fighting vehicle characteristics *See* BFV
MACCS V-7, V-8, VII-5, VII-6, VII-17, VII-18, VII-19, VIII-12
MACG I-7, B-3, B-5
MAG I-5, I-6, I-7, IX-15, IX-17, IX-18
MAGTF I-1, I-4, I-5, II-12, II-16, II-18, III-5, III-6, IV-16, V-8, V-16, VI-2, VII-1, VII-12, VII-13, VII-14, VII-16, VII-17, VII-18, VII-19, VII-25, VII-28, VIII-5, VIII-12, VIII-13, IX-19, B-1, B-2, B-4
Intelligence organizations III-5
MAGTF CE II-18, V-8, VII-12, VII-19
Main support battalion *See* MSB
Maintenance company (DS)
capabilities IX-10
major equipment IX-11
Maintenance support team *See* MST
Major subordinate command *See* MSC
Major weapons and aircraft summary IV-17
MALS IX-17, IX-18, IX-19
MALSP IX-19
maneuver I-2, I-4, I-8, I-9, I-10, II-3, II-5, II-6, II-7, IV-1, IV-4, IV-5, IV-6, IV-8, IV-9, IV-10, IV-11, IV-14, IV-15, V-1, V-2, V-3, V-5, V-6, V-9, V-10, V-13, V-14, V-16, V-17, VI-1, VI-10, VI-11, VI-12, VII-1, VII-2, VII-3, VII-5, VII-7, VII-8, VII-9, VII-11, VII-15, VII-27, VIII-2, VIII-4, VIII-7, VIII-10, VIII-11, VIII-12, VIII-13, IX-13, IX-14, A-1, A-2, A-3, A-4, A-6, A-7
AAV company IV-8
AMCI operations complementary capabilities IV-10
artillery battalion IV-7
control measures IV-6
employment options IV-15
integrated and complementary capabilities IV-10
light armored reconnaissance company IV-8
MEB IV-8
MEB organizations IV-6

notional Army brigade ground organizations IV-1
space requirements IV-5
tactical IV-5
tank battalion IV-7
techniques IV-5
unopposed movement rates IV-6
weapons systems IV-16
zone considerations IV-5
Maneuver control system II-7 *See* MCS
MANPADS VIII-7, VIII-8, VIII-9, VIII-10, VIII-13
Man-portable air defense system *See* MANPADS
MARDIV I-4, I-5, II-3, VIII-6
Marine air wings *See* MAWs
Marine air-ground task force *See* MAGTF
Marine air command and control system *See* MACCS)
(MACCS/force fires coordination center (FFCC)/fire support coordination center (FSCC) relationships V-8
Marine air control group *See* MACG
Marine aircraft group *See* MAG
Marine air traffic control detachment *See* MATCD
Marine aviation logistics squadrons *See* MALS
Marine Corps aviation logistics support program *See* MALSP
Marine Corps Doctrinal Publication *See* MCDP
Marine Corps Exchange *See* MCX
Marine Corps intelligence analysis system III-10
Marine Corps reference publication *See* MCRP
Marine Corps service component I-5
Marine divisions *See* MARDIVs
Marine expeditionary brigade *See* MEB
Marine expeditionary unit *See* MEU
Marine heavy helicopter *See* HMH
Marine light/attack helicopter *See* HMM
Marine medium/attack helicopter *See* HMLA
Marine wing support group *See* MACG
Marine wing support squadrons *See* MWSS
(fixed-wing) engineer equipment VI-6
Maritime prepositioning ships *See* MPS
Maritime prepositioning force *See* MPF
Maritime prepositioning ship squadron *See* MPSRON
MATCD VII-13, VII-18, VIII-6, VIII-13, VIII-14
MAW I-5, IX-25, B-2, B-3
MCDP IV-8
MCRP VI-11, VIII-1
MCWP III-1, VI-1
MCS II-7
MCX IX-13
Meals ready-to-eat *See* MRE
MEB I-1, I-5, I-6, I-8, I-10, II-1, II-3, II-4, II-6, II-12, II-13, II-14, II-16, III-6, III-8, III-9, III-10, IV-6, IV-7, IV-8, IV-9, IV-10, IV-11, IV-12, IV-13, IV-14, IV-15, IV-16, V-6, V-7, V-8, V-11, V-14, V-15, V-16, V-17, VI-2, VI-3, VI-4, VI-5, VI-7, VI-8, VI-9, VI-10, VII-1, VII-17, VII-18, VII-20, VII-21, VII-22, VII-24, VII-26, VII-17, VII-28, VII-29, VIII-5, VIII-6, VIII-12, VIII-13, IX-1, IX-7, IX-15, IX-16, IX-17, IX-19, IX-20, IX-21, IX-22, IX-23, IX-24, IX-25, IX-26, IX-27, IX-28, IX-29, IX-30, B-2, B-5
air combat element (ACE) Marine wing support squadron VI-5
artillery V-17
augmentation requirements I-10
brigade service support group (BSSG) engineer company VI-7
capabilities and limitations I-8
characteristics V-11
characteristics of MEB and notional Army brigade artillery V-11
collection/EW capabilities III-10
DS communications company (Reinforced) capabilities and limitations summary II-14
fixed-wing aircraft capabilities VII-21

ground combat element (GCE)
combat engineer company VI-4
logistics C2 under corps control IX-23
mobility assets IV-9
rotary-wing aircraft capabilities VII-22
Target acquisition assets V-8
MEB CE II-13
MEF I-1, I-5, I-6, I-8, II-3, II-5, II-11, II-13, II-16, II-18, III-6, III-7, III-8, III-9, IV-4, IV-6, IV-10, IV-14, IV-15, V-12, V-14, V-15, V-16, VI-10, VII-5, VII-13, VII-22, VII-23, VII-25, VII-28, VIII-5, VIII-6, VIII-13, IX-4, IX-6, IX-11, IX-12, IX-14, IX-15, IX-21, IX-22, IX-24, IX-25, IX-26, IX-27, IX-28, IX-29, IX-30, A-2, B-2, B-5
MEF G-2 Section III-7
Memorandum of understanding *See* MOU
METT-T I-2, I-3, II-8, IV-1, IV-6, IV-9, V-12, V-13, VI-1, VII-1, VII-2, VII-4, VII-8, VII-22, VIII-4, VIII-9, VIII-13, IX-4, IX-6
METT-TC I-2, I-3, II-8, IV-1, IV-6, IV-9, V-12, V-13, VI-1, VII-1, VII-2, VII-4, VII-8, VII-22, VIII-4, VIII-13, IX-4, IX-6
MEU I-5, III-7, VIII-13, IX-15, B-2, B-4, B-5
MI II-5, III-3, III-4, III-5, A-3
Military intelligence *See* MI
Military operations on urbanized terrain See MOUT
Military operations other than war *See* MOOTW
Military police *See* MP
MLRS I-3, I-9, I-10, IV-17, V-3, V-4, V-5, V-6, V-11, V-12, V-13, V-14, VII-23, IX-5, A-3
ammunition planning figures V-14
Mobile subscriber equipment *See* MSE
Mobile subscriber radio terminals *See* MSRTs
Mobility tasks VI-8
MOOTW B-2, B-4
MOU IX-24
MOUT IV-11, IV-13, IV-14
MP III-3, IV-4, VI-5, A-4, A-5
MP Prisoner of War Command *See* MPPWCOM
MPF I-1
MPPWCOM A-5
MPS IX-19
MPSRON I-1, V-7, IX-20
MRC-142 II-14, II-15, II-17, II-18
MRE IX-12
MSB IX-4, IX-5, IX-6, IX-14, IX-15
augmentation of notional Army brigade IX-5
MSC II-14, II-15, II-17, II-18
MSE II-11, II-14, II-15, II-16, II-17, II-18, VII-6
MSRTs II-18
MSSG I-5, IX-15, IX-17, B-4, B-5
MST II-15, IX-3, IX-5, IX-13
MTACS I-7
Multiple launch rocket system *See* MLRS
Multiple launch rocket system (MLRS) battery V-5
MWHS B-3
MWR IX-13
MWSG IX-17, B-3
MWSS VI-4, VI-5, VI-6, IX-17, IX-18, IX-20

N

National stock number *See* NSN
National inventory control point *See* NICP
NAVFAC IX-12
Naval construction force *See* NMCB
Naval gunfire *See* NGF
Naval mobile construction battalion *See* NMCB
Naval surface fire support *See* NSFS
Naval telecommunications system *See* NTS
Navy Exchange Service Command *See* NEXCOM
NBC I-8, II-7, IX-9, IX-28, A-4
NCF VI-8, VI-9, VI-10
NCO V-2, VII-4
NEO B-2, B-4
NEXCOM IX-13

NGF V-7, V-8, V-15
NICP IX-25, IX-27
NMCB VI-8
Noncombatant evacuation operations *See* NEO
Noncommissioned officer *See* NCO
Notional Army brigade I-1, I-3, II-3, II-5, II-8
  air defense artillery (ADA) organization VIII-9
  augmentation requirements I-9
  capabilities and limitations summary I-4
  collection/electronic warfare (EW) capabilities III-9
  command group functions II-9
  engineer battalion VI-2
    equipment VI-2
  external communications net structure when operating with MEF V-16
  field artillery organization V-3
  fire support coordination organizations V-2
  main CP functions and characteristics II-10
  maneuver space requirements IV-5
  mechanized infantry battalion IV-2
  operations platoon capabilities III-5
  rear CP functions and characteristics II-10
  signal platoon capabilities/ limitations summary II-11
  signal section capabilities/ limitations summary II-11
  tactical CP functions and characteristics II-9
  tank battalion IV-3
Notional army brigade artillery
  augmentation requirements I-9
  capabilities and limitations I-4
  characteristics V-11
  direct support military intelligence(MI) company III-4
  external communications net structure V-16, V-17
  main CP functions and characteristics II-10
  rear CP functions and characteristics II-10
  signal section capabilities II-11
  tactical CP functions and characteristics II-9
Notional brigade service support group IX-16
Notional combat engineer company (reinforced) equipment in support of a MEB GCE VI-4
Notional combat support battalion in support of a MEB IX-22
Notional engineer company (reinforced) equipment in support of a MEB BSSG VI-7
Notional Marine Corps expeditionary brigade I-6
Notional MEB
  artillery battalion VI-7
  engineers VI-3
Notional MEF ACE organization VII-13
Notional US Army Corps A-1
NSFS V-15, VII-19
NSGS V-15
NSN IX-24, IX-27
NTS II-13, II-14, VII-22

O

OAAW VII-14
O&I VII-30
OAS VII-13, VII-15, VII-19
Observation helicopters *See* OH
Offensive air support *See* OAS
OH III-3, III-9, IV-17, V-4, VII-2, VII-10, VII-23, VII-31
OPCON II-1, II-3, II-4, IV-9, V-9, VI-3, VII-23, VIII-2, IX-21, IX-23, IX-30, A-5
OPCON/TACON II-3, II-4
Operating room *See* OR
Operation plan in concept format *See* CONPLAN
Operational control *See* OPCON
Operations and intelligence *See* O&I
Operations staff officer *See* S3
Opposed rates of movement in km/h IV-15
Organization and fundamentals I-1

Optional Army brigade tactical CP functions and characteristics II-9
OR IX-3

P

PACOM A-4
Pacific Command *See* PACOM
Palletized loading system *See* PLS
PDB A-5
PIR III-2, III-3
PLL IX-3, IX-5, IX-13, IX-27
PLS IX-3, IX-10, IX-26
PMCS V-13
POL VI-8, VII-5, IX-7, IX-8, IX-9, IX-12, IX-19, IX-25
POTF A-5
Prescribed load lists *See* PLL
Preventive maintenance checks and services *See* PMCS
Priority intelligence requirements *See* PIR
Psychological
operations *See* PSYOP
operations task force *See* POTF
PSYOP A-5
dissemination battalion See PDB

R

R&S III-3
RAU II-11, II-15, II-18
RC A-4
Rearm/refuel point *See* RRP
Reception, staging and onward movement *See* RSO
Reconnaissance and surveillance *See* R&S
Reinforced marine divisions I-4
Remote access unit *See* RAU
Remote multiplayer combiner *See* RMC
Repairable exchange *See* RX
Reporting formats C-1
Required supply rate *See* RSR
Reserve component *See* RC
Restricted operations zones *See* ROZ
RMC II-18
ROZ VII-5
RRP IX-26
RSO IX-6
RSR IX-12
RX IX-3

S

S1 II-10, VI-5, VII-30
S2 II-8, II-9, III-3, III-4, V-5, VII-6, VII-30, VIII-11
S3 II-8, II-9, V-2, V-5, VI-5, VII-6, VII-30
S4 II-10, VII-30
SAAFR VII-5
SAAMs VII-29
SACC V-15
SADC VII-13, VII-14, VII-18, VIII-5, VIII-12, VIII-13
SADF VIII-12
SAM VIII-13
Sample corps support group (-) IX-7
SAR III-8
SATCOM II-14, II-16, VII-22, VII-29, VII-32, VII-33
Sea-air-land *See* SEAL
SC II-11, II-14, II-16
SCR II-15
SEAD II-8, V-3, V-4, V-6, VII-3, VII-7, VII-9, VII-10, VII-14, VII-15, VII-23, VIII-12, A-3
SEAL B-4
Seaport of debarkation *See* SPOD
Sector air defense commander *See* SADC
Sector air defense facility *See* SADF
Secure telephone unit III *See* STU-III
SEMA VII-1, VII-2
SFCP V-7
SHORAD I-9, I-10, VIII-7, VIII-8, VIII-11
Shore fire control party *See* SFCP
Short range air defense *See* SHORAD
Short ton *See* STON
SHTU VIII-12
Simplified handheld terminal unit *See* SHTU
SINCGARS II-16, V-15, VII-29, VII-31, VII-32, VIII-11, VIII-12
Single channel *See* SC
Single channel ground and airborne radio system *See* SINCGARS
Single channel radio *See* SCR

Special assignment airlift missions *See* SAAMs
Special electronic mission aircraft *See* SEMA
Special purpose integrated remote intelligence terminal *See* SPIRIT
Special purpose MAGTF *See* SPMAGTF
Special purpose Marine air ground task forces *See* SPMAGTF
SOC III-7, IX-15, B-4
SOPs II-7, VII-6
Special operations capable *See* SOC
SPIRIT III-4
SPMAGTF VIII-13, B-2, B-5
SPOD IX-25, IX-26
Standard Army aviation flight routes *See* SAAFR
Standard vehicle mounted launcher *See* SVML
STON IX-3, IX-4, IX-8, IX-9, IX-10
STU-III II-14, II-15, II-16
Supply company (DS) major equipment IX-9
Supporting arms coordination center *See* SACC
Surface-to-air missiles *See* SAM
Survivability tasks VI-9
SVML VIII-8

T

TAA VII-8
TAC II-5, II-8, II-9, II-10
TAC CP II-5, II-8, II-9, II-10
TAC(A) VII-19, VII-25
TACC V-7, V-8, VII-5, VII-6, VII-13, VII-14, VII-13, VII-18, VII-23, VII-25, VII-26, VII-27, VIII-5, VIII-6, VIII-12
TACON II-1, II-2, II-3, II-4, V-9
TACP V-5, V-6, VII-18, VII-19, VII-25, VII-33
FAC communications equipment VII-33
FACP personnel VII-19
TACS VII-24
TACSAT II-11, II-15, II-16
Tactical *See* TAC
Tactical air coordinators (airborne) *See* TAC(A)
Tactical air direction *See* TAD
Tactical air request *See* TAR
Tactical assembly area *See* TAA
Tactical combat force *See* TCF
Tactical control *See* TACON
Tactical operations center *See* TOC
Tactical petroleum terminal *See* TPT
Tactical PSYOP battalion *See* TPB
Tactical PSYOP companies *See* TPC
Tactical PSYOP detachments *See* TPD
Tactical PSYOP development detachment *See* TPDD
Tactical recovery of aircraft and personnel *See* TRAP
Tactical satellite *See* TACSAT
Tactics, techniques, and procedures *See* TTP
TAD VII-15, VII-16
TALO VII-28, VII-29
TAOC I-7, V-8, VII-7, VII-14, VII-18, VII-23, VII-25, VIII-5, VIII-6, VIII-12, VIII-13, VIII-14
TAR VII-15, VII-16, VII-26
TAVB IX-20
Task execution plan See TEP
TBMD VII-14
TCF VII-3, VII-11
TCU VIII-11
TEK II-16
TEP II-17
TF IV-1, IV-2, IV-3, IV-4, IV-5, IV-6, VI-1
Theater air control system *See* TACS
Theater airlift liaison officer *See* TALO
Theater ballistic missile defense *See* TBMD
Theater opening package *See* TOP
Theater support command *See* TSC
Time on target *See* TOT
TOC II-9, II-16, VI-1, VII-24, VII-28, VIII-5
TOP IX-6
TOT VII-26, VII-28
TOW IV-2, IV-17, VII-22, VII-24
TPB A-5
TPC A-5
TPD A-5
TPDD A-5
TPT IX-25
Transmission security key See TSK

Transport support battalion *See* TSSB
Transportable computer unit *See* TCU
TRAP VII-16, VII-17, B-4
Tri-service tactical communications program *See* TRI-TAC
TRI-TAC II-17
TROJAN III-4
Trunk encryption key *See* TEK
TSB B-3
TSC II-14, II-15, II-17, IX-6
TSK II-16
TTC II-14, II-15, II-17, II-18
TTP II-4, V-1, A-2
Tube-launched optically tracked wire-guided *See* TOW
Typical communications systems available from Marine Corps DS communications company (reinforced) and notional Army brigade signal section II-15

U

UAV I-7, III-3, III-4, III-5, III-6, III-8, III-10, V-8, V-11, VIII-8, VIII-9
ULCS II-14, II-17, II-18
UNAAF II-1, II-2
Unopposed movement rates IV-6
Unexploded ordnance *See* UXO
Unified Action Armed Forces *See* UNAAF
United States Air Force *See* USAF
United States Army *See* USA
United States Joint Forces Command *See* USJFC
United States Marine Corps *See* USMC
United States Navy *See* USN
Unmanned aerial vehicles *See* UAV
US Army/USMC air operations connectivity VII-25
US message text format *See* USMTF
USA I-1, I-2, V-10, V-15, VII-33
USACE IX-12
USAF II-8, V-5, V-15, VII-4, VII-28, VII-30, VII-32, A-4
USAF/USMC/USN fixed-wing aircraft communications summary VII-32
USJFC A-4
USMC I-1, I-8, I-9, I-10, II-8, II-16, IV-7, V-1, V-11, V-12, V-15, VI-1, VII-8, VII-12, VII-24, VII-25, VII-30, VII-32, VIII-5, IX-13, IX-15, IX-19, IX-20, IX-22, IX-24, IX-26, IX-27, IX-28, IX-29
USMTF VII-27
USN I-9, I-10, IV-7, VII-30, VII-32, IX-17
UXO V-14, VI-8, VI-11, VI-12

V

VMA B-3
VMAQ I-6, III-10, B-3
VMFA I-6, B-3
VMGR I-6, B-3
VMU I-7, B-3
Marine aerial refueler transport *See* VMGR
Marine attack *See* VMA
Marine fighter attack *See* VMFA
Marine tactical electronic warfare *See* VMAQ

W

WAN II-11
WCS VII-10, VIII-11
Weapons control status *See* WCS
Wide area network *See* WAN

X

XO II-10

Z

Zone considerations IV-5

FM 3-31.1
MCWP 3-36
21 NOVEMBER 2001

By Order of the Secretary of the Army:

ERIC K. SHINSEKI
General, United States Army
Chief of Staff

Official:

JOEL B. HUDSON
Administrative Assistant to the
Secretary of the Army
0133702

DISTRIBUTION:
Active Army, Army National Guard, and U.S. Army Reserve: To be distributed in accordance with the initial distribution number 115421, requirements for FM 3-31.1.