ARMY FM 10-588
AIR FORCE TO 13C7-28-21

AIRDROP OF SUPPLIES
AND EQUIPMENT:

DISTRIBUTION UNLIMITED

RIGGING 16-FOOT PLASTIC ASSAULT BOATS

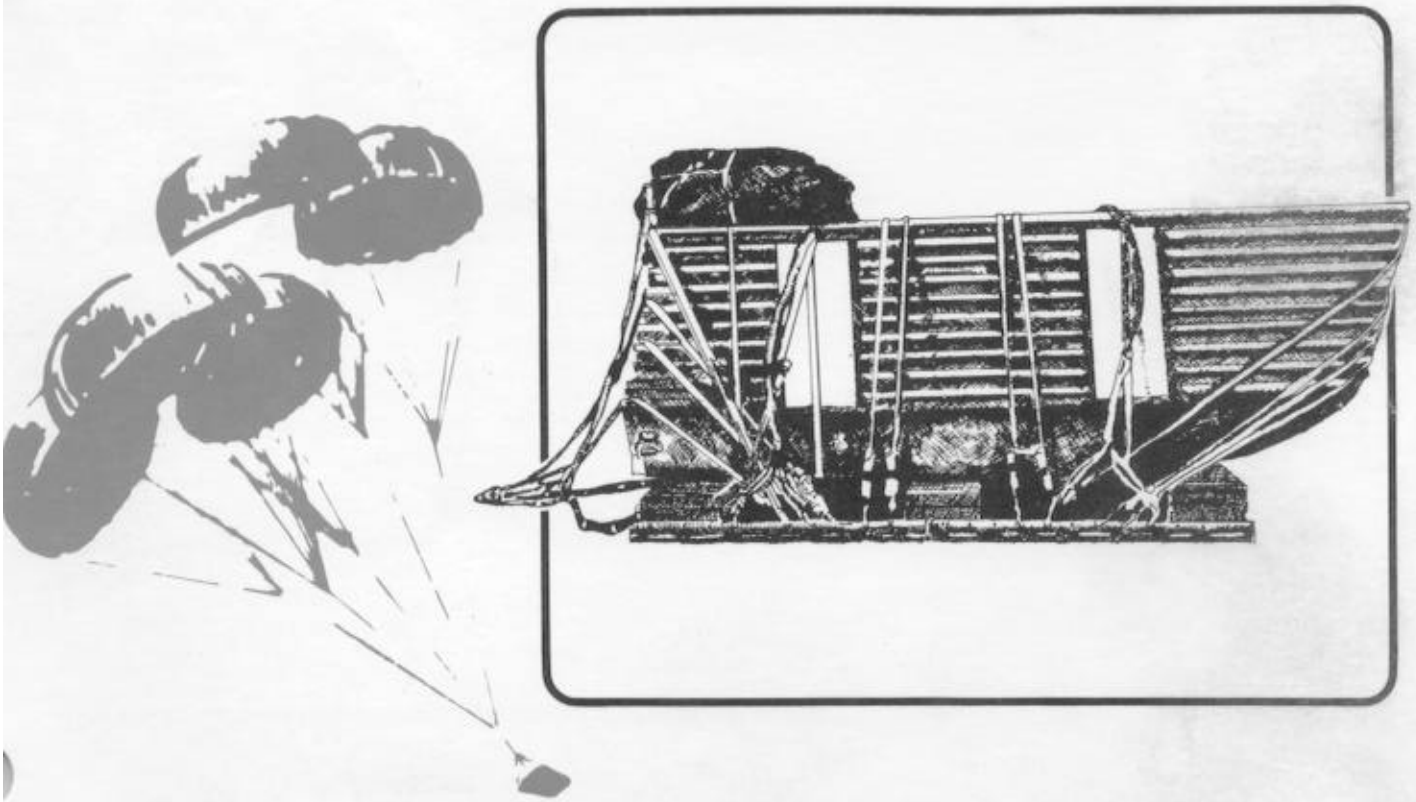

DEPARTMENTS OF THE ARMY AND THE AIR FORCE

DEPARTMENT OF THE ARMY
AERIAL DELIVERY AND FIELD SERVICES DEPARTMENT
U.S. ARMY QUARTERMASTER CENTER AND SCHOOL
1010 SHOP ROAD
FORT LEE, VIRGINIA 23801-1502

REPLY TO
ATTENTION OF

ATSM-ADFSD

7 October 1998

MEMORANDUM FOR Commander, US Army Training Support Center, ATTN: ATIC-TIST (Mr. Baston), Fort Eustis, VA 23604

SUBJECT: Distribution Restriction Notice on Airdrop Rigging Manuals

1. As proponent for development of all 10-500 series airdrop rigging field manuals and the 10-450 sling load manuals, it has been determined that the distribution restriction on these field manuals should be changed to read: Approved for public release, distribution unlimited.

2. It is requested that unrestricted release of these field manuals be made via the Army Training Digital Library.

3. The new distribution notice will be added to the cover pages as future changes/revisions are made to the manuals.

4. Enclosed you will find a numerical list and the number of changes of the manuals that have unlimited distribution.

5. The point of contact for this action is Mr. Roger Hale, DSN 687-4769.

Encl

THEODORE J. DLUGOS
Director, Aerial Delivery and
Field Services Department

Distribution restrictions for the following Airdrop field manuals should read **"Approved for public release; distribution is unlimited."**

10-450-3	10-524, c2	10-552, c2
10-450-4	10-526, c3	10-554
10-500-2, c2	10-527, c3	10-555, c2
10-500-3, c1	10-528, c6	10-556
10-500-7, c1	10-529, c1	10-557
10-500-45	10-530	10-558, c1
10-500-53	10-531, c2	10-562
10-500-66, c1	10-532, c4	10-564, c6
10-500-71	10-533	10-567, c1
10-508, c1	10-534, c2	10-569, c1
10-510, c3	10-535	10-571
10-512, c4	10-537, c4	10-572
10-513, c3	10-539, c3	10-573, c1
10-515, c1	10-540, c2	10-574, c4
10-516	10-541, c1	10-575, c2
10-517, c5	10-542, c2	10-576, c1
10-518	10-543, c2	10-577
10-519, c3	10-546	10-579, c2
10-520, c3	10-547, c1	10-584
10-521, c2	10-548, c1	10-586
10-522, c1	10-549	10-588
10-523, c2	10-550, c3	10-591, c1

FIELD MANUAL
NO 10-588
TECHNICAL ORDER
NO 13C7-28-21

DEPARTMENTS OF THE ARMY
AND THE AIR FORCE
Washington, DC, 29 May 1984

AIRDROP OF SUPPLIES AND EQUIPMENT: RIGGING 16-FOOT PLASTIC ASSAULT BOATS

TABLE OF CONTENTS

		Paragraph	Page
PREFACE			ii
CHAPTER 1.	INTRODUCTION		
	Description of Items	1-1	1-1
	Special Considerations	1-2	1-1
CHAPTER 2.	RIGGING BOATS ON TYPE II MODULAR PLATFORM		
	Description of Load	2-1	2-1
	Preparing Platform	2-2	2-1
	Building and Placing Honeycomb Stacks	2-3	2-2
	Preparing and Setting Boats on Platform	2-4	2-3
	Lashing Boats and Safetying Suspension Slings	2-5	2-6
	Stowing Cargo Parachutes	2-6	2-7
	Installing Extraction System	2-7	2-8
	Installing Release System	2-8	2-8
	Placing Extraction Parachute	2-9	2-8
	Marking Rigged Load	2-10	2-8
	Equipment Required	2-11	2-8
GLOSSARY			Glossary-1
REFERENCES			References-1

*This manual supersedes TM 10-500-88/TO 13C7-28-21, 4 January 1971.

PREFACE

Scope

This manual tells and shows how to rig the 16-foot plastic assault boats for a low-velocity airdrop from a C-130 or a C-141 aircraft. This manual is designed for use by all parachute riggers.

User Information

The proponent of this publication is the US Army Quartermaster School. You are encouraged to report any errors or omissions and suggest ways for making this a better manual. Army personnel, send your comments on DA Form 2028 (Recommended Changes to Publications and Blank Forms) directly to:

Commandant
US Army Quartermaster School
ATTN: ATSM-DTL
Fort Lee, VA 23801

Air Force personnel, send your reports on AFTO Form 22 (Technical Order Publication Improvement Report) through:

Headquarters
Military Airlift Command
(MAC/DOXT)
Scott AFB, IL 62225

to:

Commandant
US Army Quartermaster School
ATTN: ATSM-DTL
Fort Lee, VA 23801

Also send information copies of AFTO Form 22 to:

San Antonio ALC/MMEDTR
Kelly AFB, TX 78241

CHAPTER 1
INTRODUCTION

1-1. Description of Items

The description of the items covered in this manual is as follows:

a. The ten 16-foot plastic assault boats weigh a total of 3,560 pounds. They are 197 inches long, 64 inches wide, and 64 inches high.

b. The accompanying equipment consists of 4 kit bags and 10 paddle cases. The kit bags contain life preservers. Each paddle case contains 9 paddles.

1-2. Special Considerations

a. The loads covered in this manual may include hazardous materials as defined in AFR 71-4/TM 38-250. If included, the hazardous material must be packaged, marked, and labeled as required by AFR 71-4/TM 38-250.

CAUTION

Only ammunition listed in FM 10-553/TO 13C7-18-41 may be airdropped.

b. A copy of this manual must be available to the joint airdrop inspectors during the before- and after-loading inspections.

c. The overhang at the front of the load on the platform is an authorized exception to FM 10-500/TO 13C7-1-5.

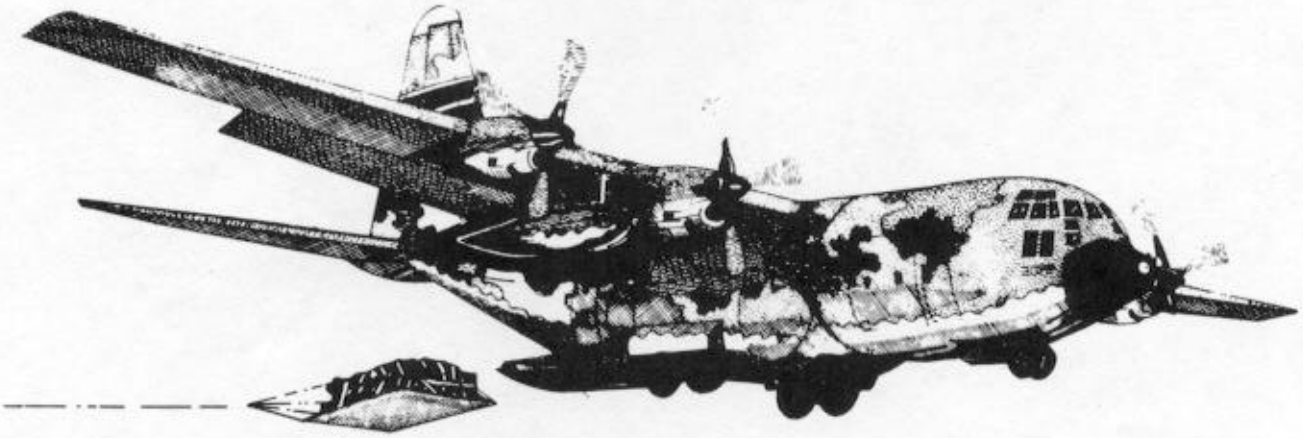

CHAPTER 2

RIGGING BOATS ON TYPE II MODULAR PLATFORM

2-1. Description of Load

The ten 16-foot plastic assault boats are rigged on a 12-foot, type II, modular platform with two G-11A or two G-11B cargo parachutes for a low-velocity airdrop from C-130 or C-141 aircraft.

2-2. Preparing Platform

a. Inspect, or assemble and inspect, the modular platform as outlined in TM 10-1670-208-20&P/TO 13C3-4-12.

b. Construct the strongbacks according to TM 10-1670-208-20&P/TO 13C3-4-12.

c. Secure strongbacks to each panel of the platform as shown in figure 2-1.

Note: The strongbacks are not included in all of the figures in this manual, but the list of equipment required and the rigged load data have been changed to indicate correct information. The strongbacks MUST be used.

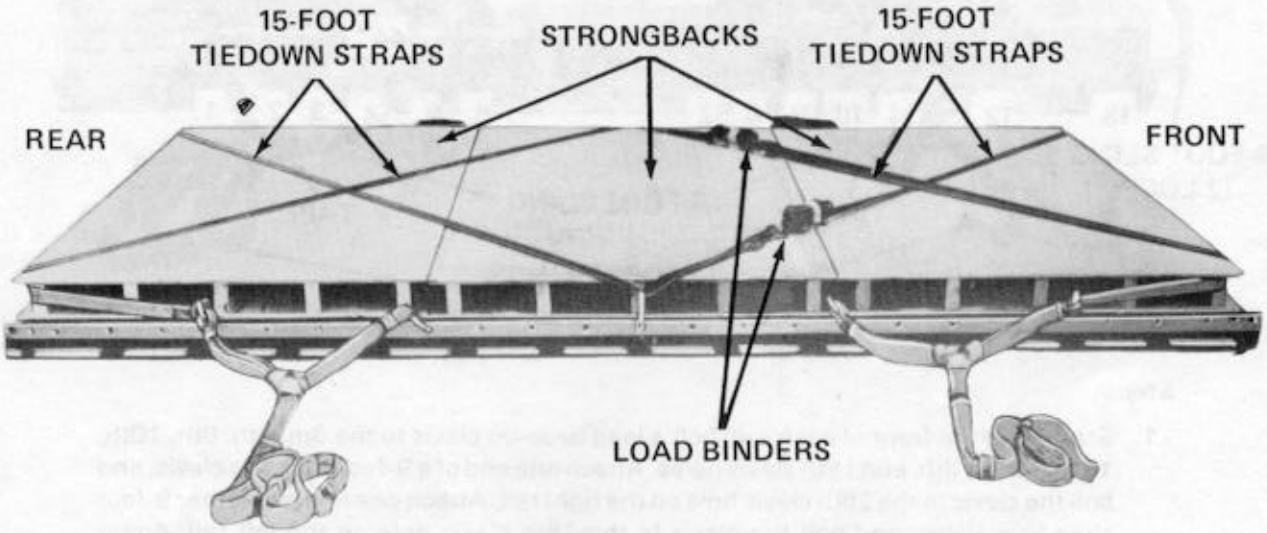

Step:

1. Form the suspension slings with four 3-foot and four 12-foot slings. Pass each 3-foot sling through the loop in a 12-foot sling. Even the 3-foot slings, and pull the keepers on the 12-foot slings tight against the 3-foot slings. Center the 12-foot slings on the 3-foot slings, and tape them in place.
2. Fit a load tiedown clevis to the free ends of each 3-foot sling. Bolt the clevises to the 5th and 9th clevis holes (counting from the front of the platform) in both rails for the front slings and to the 17th and 21st clevis holes for the rear slings.
3. Bolt a clevis to the 13th clevis hole in both rails.
4. Set one strongback on each panel of the platform. Using four 15-foot tiedown assemblies, lash the strongbacks to the clevises in holes 5, 13, and 21 (on both rails) according to FM 10-500/TO 13C7-1-5.

Figure 2-1. Suspension slings installed and strongbacks secured to platform.

2-3. Building and Placing Honeycomb Stacks

Build and place honeycomb stacks on the strongbacks as shown in figure 2-2.

Note: Glue the honeycomb layers together and to the strongbacks.

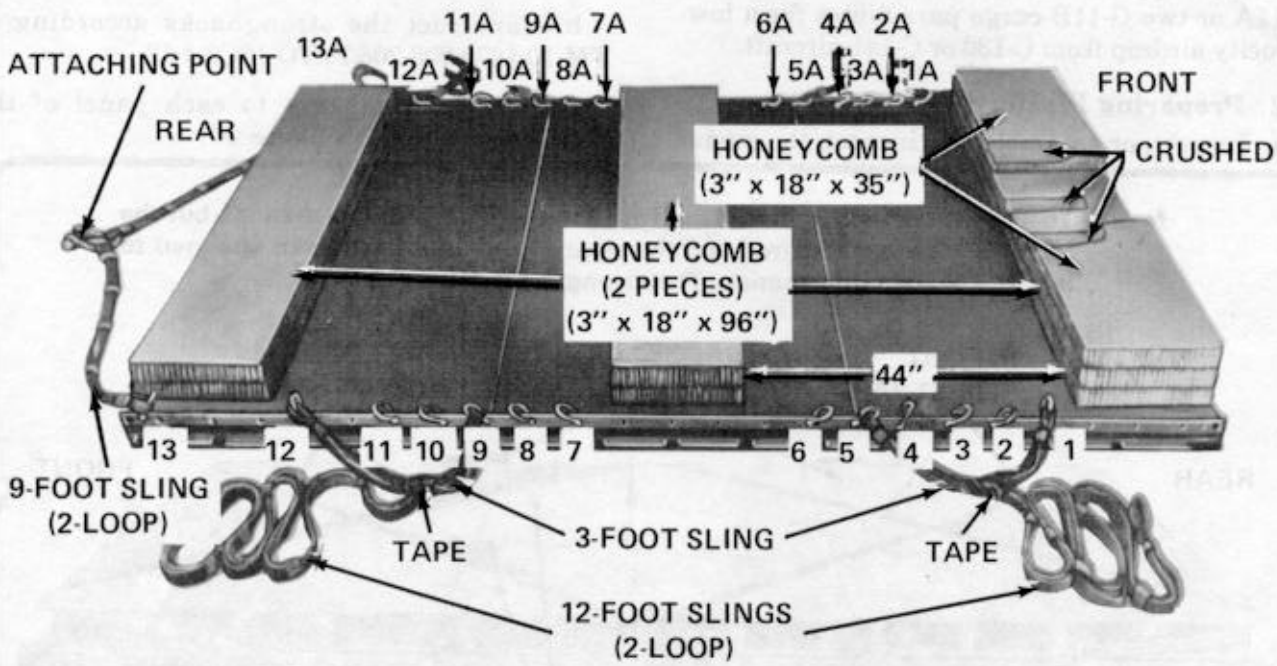

Step:

1. Starting at the front of each rail, bolt a load tiedown clevis to the 6th, 7th, 8th, 10th, 15th, 16th, 18th, and 19th clevis holes. Attach one end of a 9-foot sling to a clevis, and bolt the clevis to the 25th clevis hole on the right rail. Attach one end of another 9-foot sling to a clevis, and bolt the clevis to the 25th clevis hole on the left rail. Again starting at the front of each rail, number the clevises on the right rail from 1 through 13 and those on the left rail from 1A through 13A.

Note: Do not count the clevis bolted to the 13th clevis hole when numbering the clevises.

2. Attach the free ends of the two 9-foot slings to a large clevis to form a platform attaching point.
3. Build three honeycomb stacks with two 18- by 96-inch pieces of honeycomb and place them on the strongbacks as shown. Place two 18- by 35-inch pieces of honeycomb on the honeycomb stack on the front end of the platform. Crush the honeycomb on the front honeycomb stack as shown.

Figure 2-2. Platform prepared and honeycomb positioned.

2-4. Preparing and Setting Boats on Platform

Prepare and lash the boats on the platform as shown in figures 2-3 through 2-5. Stow the accompanying equipment as shown in figure 2-4.

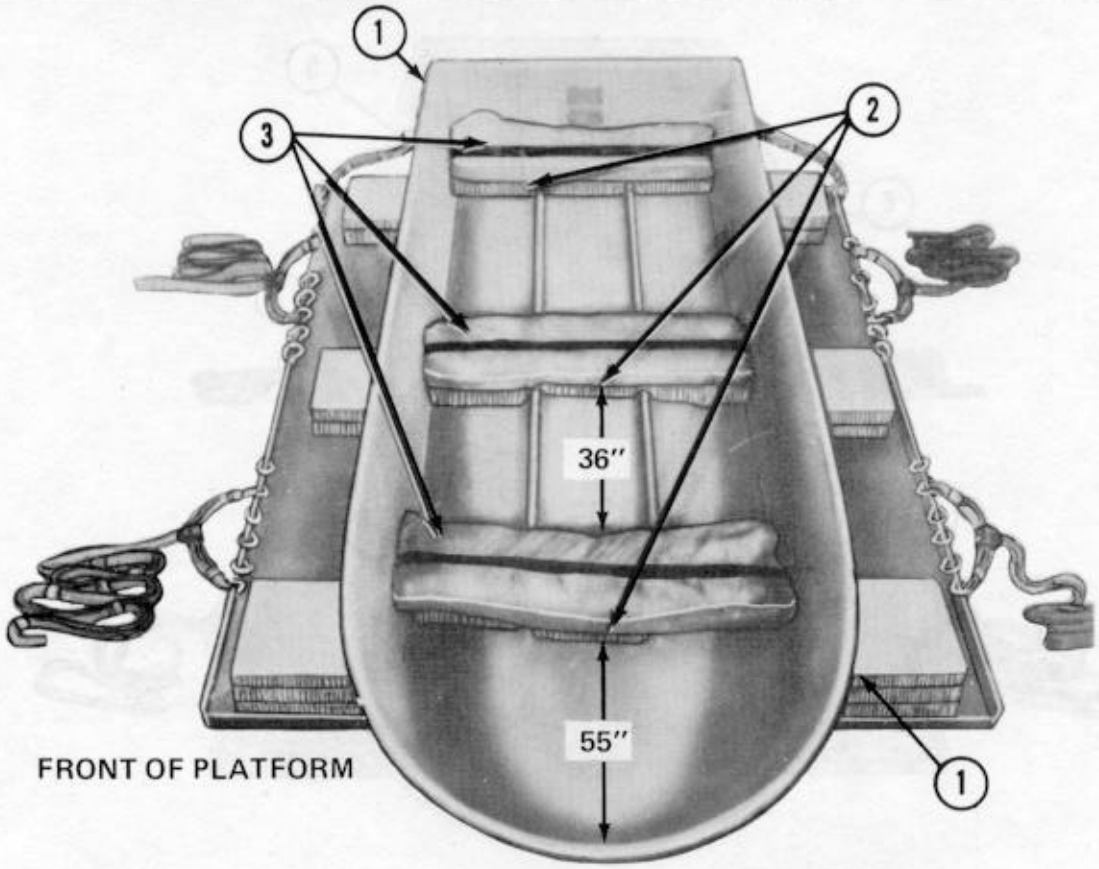

1. Center the first boat on the honeycomb stacks with the front handles of the boat even with the front edge of the platform and with the stern of the boat overhanging the rear of the platform by 10 inches.
2. Place three stacks of three 15- by 18-inch pieces of honeycomb in the bottom of the first boat. Place one stack 55 inches from the bow. Place the second stack 36 inches from the first stack. Place the third stack against the stern wall.
3. Cover each honeycomb stack with a 55-inch piece of doubled cellulose wadding. Tape the wadding in place. Place a second boat on top of the honeycomb stacks covered with cellulose wadding. Repeat the procedures above to place the honeycomb stacks and cellulose wadding in the second boat.

Figure 2-3. Honeycomb and cellulose wadding placed.

Note: The bow of the top boats overhangs the front edge of the platform by 54 inches.

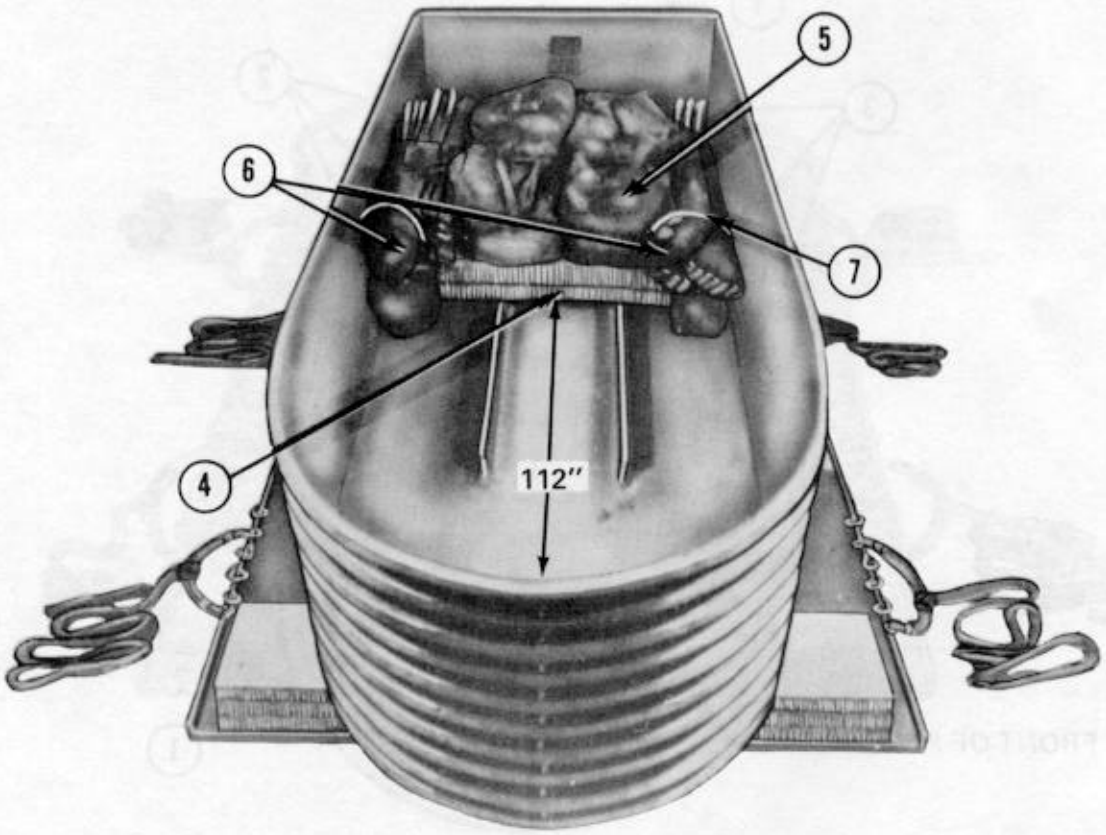

4. Repeat steps 2 and 3 for the next eight boats, as each boat is placed on the stack. Place two 36- by 36-inch pieces of honeycomb in the top boat 49 inches from the stern of the boat and centered between the sides of the boat.
5. Place four kit bags on the honeycomb.
6. Place five cases of paddles on each side of the kit bags.
7. Tie the cases of paddles together with type III nylon cord.

Figure 2-4. Remaining boats positioned and accompanying equipment stowed.

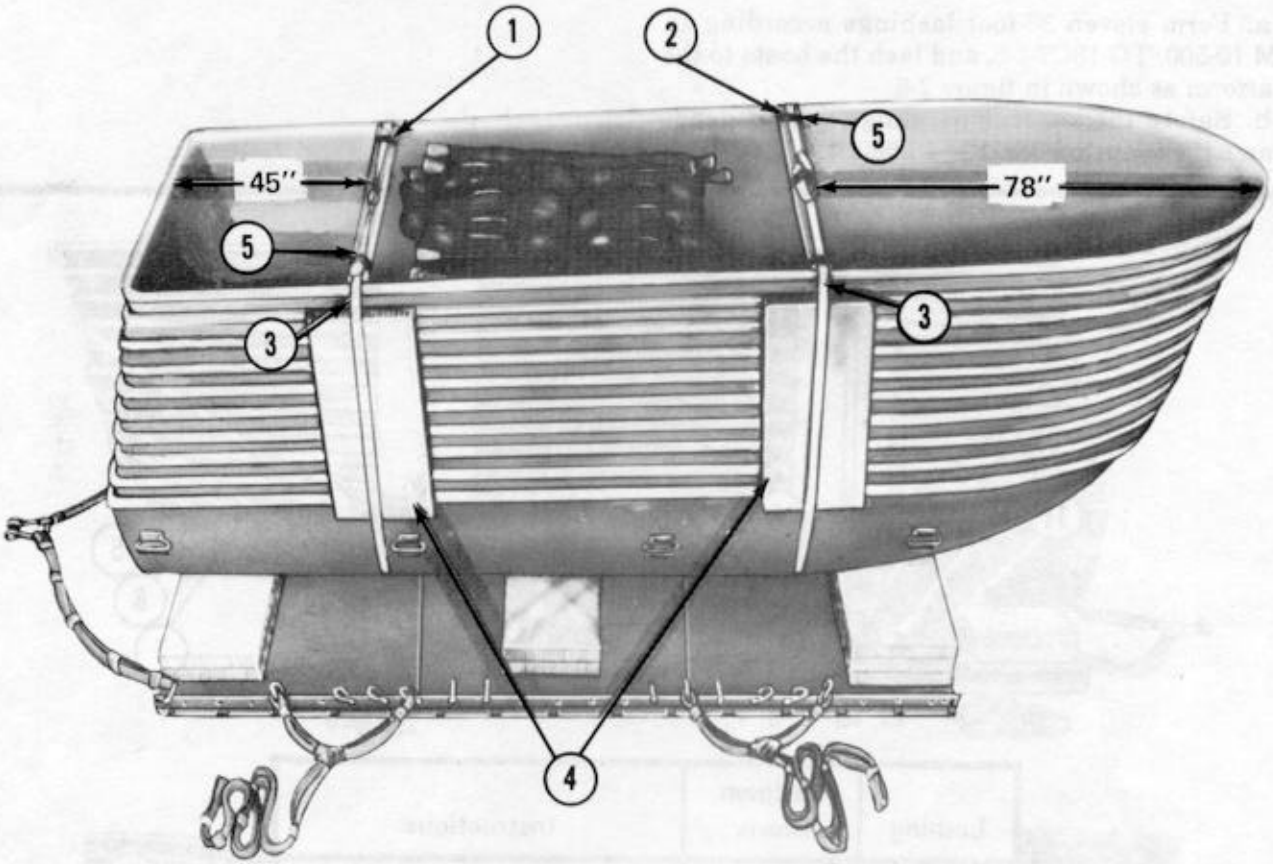

1. Place one 2- by 4- by 60-inch piece of lumber across the top boat 45 inches from the rear of the boat.
2. Place one 2- by 4- by 60-inch piece of lumber across the top boat 78 inches from the front of the boat.
3. Use four 15-foot tiedown straps to form two 30-foot tiedown straps as shown in FM 10-500/TO 13C7-1-5. Run a binding lashing under the boats and over the rear piece of lumber. Hook the ends of the lashing together with two D-rings and a load binder. Run the other binding lashing under the boats and over the front piece of lumber. Hook the ends of the lashing together with two D-rings and a load binder.
4. Before tightening the lashings, place an 18- by 40-inch piece of honeycomb between the sides of the boats and each binding lashing on both sides of the boats.
5. Tape the binding lashings to the 2- by 4- by 60-inch pieces of lumber.

Figure 2-5. Boats secured.

2-5. Lashing Boats and Safetying Suspension Slings

a. Form eleven 30-foot lashings according to FM 10-500/TO 13C7-1-5, and lash the boats to the platform as shown in figure 2-6.

b. Safety the suspension slings with a deadman's tie as outlined in FM 10-500/TO 13C7-1-5.

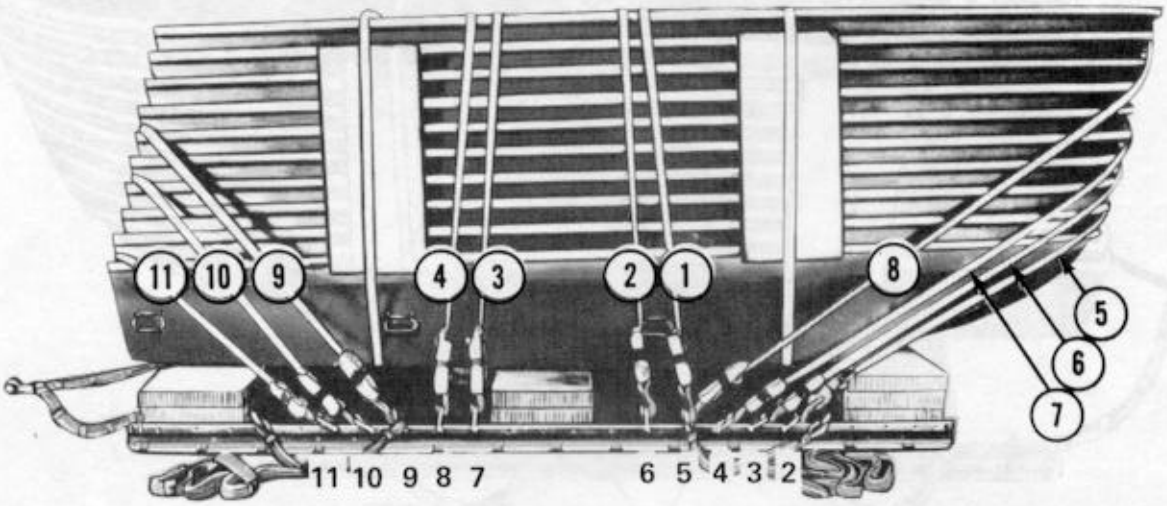

Lashing	Tiedown Clevis	Instructions
1	5 to 5A	Over boats and through kit bag handles
2	6 to 6A	Over boats, through paddle case handles, and through kit bag handles
3	7 to 7A	Same as lashing 2
4	8 to 8A	Same as lashing 1
5	2 to 2A	Through tow ring on third boat
6	3 to 3A	Through tow ring on fifth boat
7	4 to 4A	Through tow ring on sixth boat
8	5 to 5A	Through tow ring on tenth boat
9	9 to 9A	Over rear edge of sixth boat
10	10 to 10A	Over rear edge of fourth boat
11	11 to 11A	Over rear edge of first boat

Figure 2-6. Lashings installed.

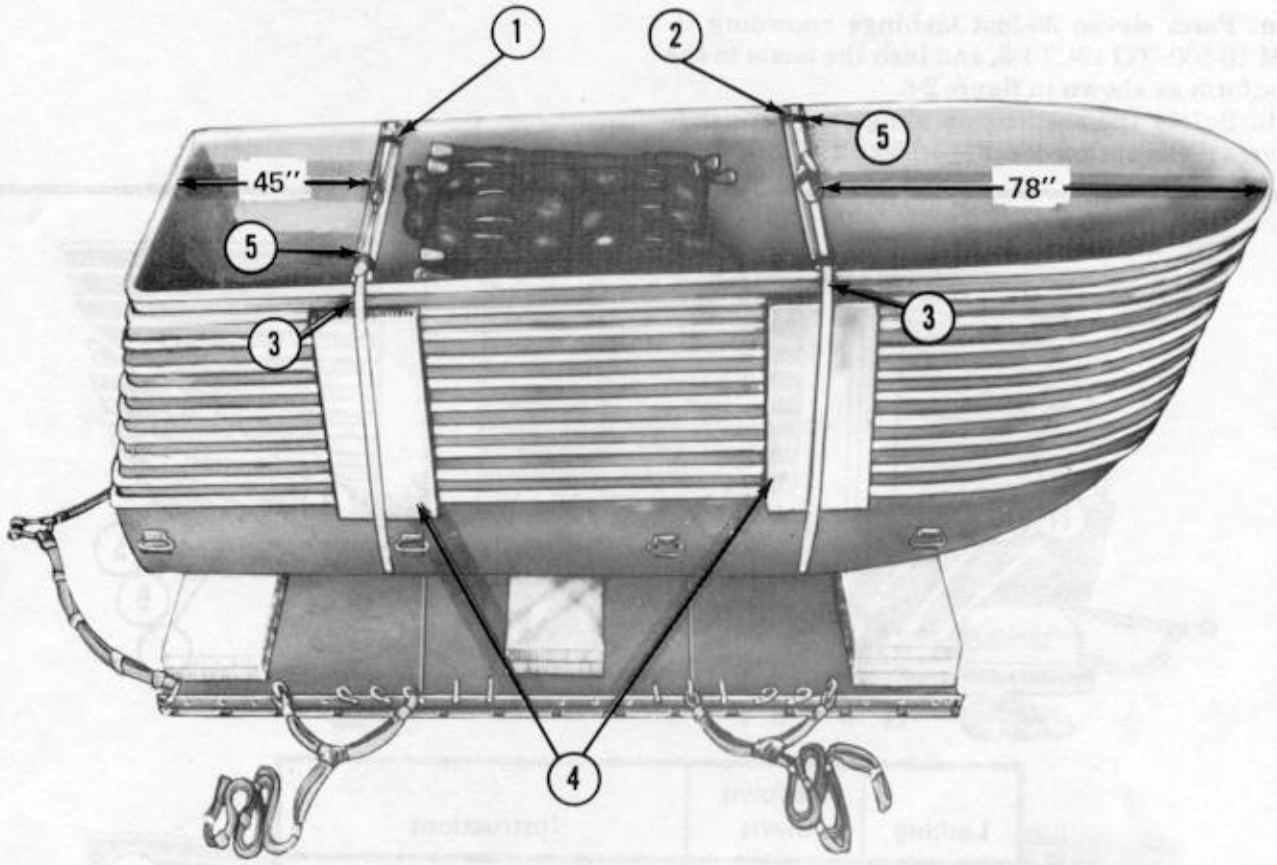

1. Place one 2- by 4- by 60-inch piece of lumber across the top boat 45 inches from the rear of the boat.
2. Place one 2- by 4- by 60-inch piece of lumber across the top boat 78 inches from the front of the boat.
3. Use four 15-foot tiedown straps to form two 30-foot tiedown straps as shown in FM 10-500/TO 13C7-1-5. Run a binding lashing under the boats and over the rear piece of lumber. Hook the ends of the lashing together with two D-rings and a load binder. Run the other binding lashing under the boats and over the front piece of lumber. Hook the ends of the lashing together with two D-rings and a load binder.
4. Before tightening the lashings, place an 18- by 40-inch piece of honeycomb between the sides of the boats and each binding lashing on both sides of the boats.
5. Tape the binding lashings to the 2- by 4- by 60-inch pieces of lumber.

Figure 2-5. Boats secured.

2-5. Lashing Boats and Safetying Suspension Slings

a. Form eleven 30-foot lashings according to FM 10-500/TO 13C7-1-5, and lash the boats to the platform as shown in figure 2-6.

b. Safety the suspension slings with a deadman's tie as outlined in FM 10-500/TO 13C7-1-5.

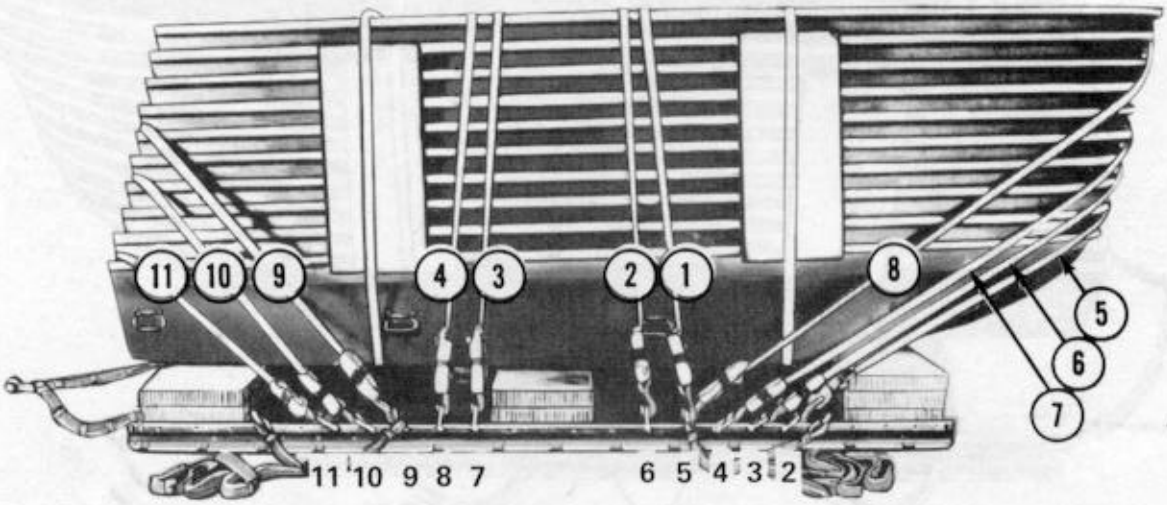

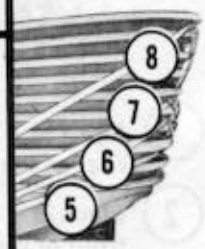

Lashing	Tiedown Clevis	Instructions
1	5 to 5A	Over boats and through kit bag handles
2	6 to 6A	Over boats, through paddle case handles, and through kit bag handles
3	7 to 7A	Same as lashing 2
4	8 to 8A	Same as lashing 1
5	2 to 2A	Through tow ring on third boat
6	3 to 3A	Through tow ring on fifth boat
7	4 to 4A	Through tow ring on sixth boat
8	5 to 5A	Through tow ring on tenth boat
9	9 to 9A	Over rear edge of sixth boat
10	10 to 10A	Over rear edge of fourth boat
11	11 to 11A	Over rear edge of first boat

Figure 2-6. Lashings installed.

2-6. Stowing Cargo Parachutes

Prepare and stow two G-11A or two G-11B cargo parachutes according to FM 10-500/TO 13C7-1-5 and as shown in figure 2-7.

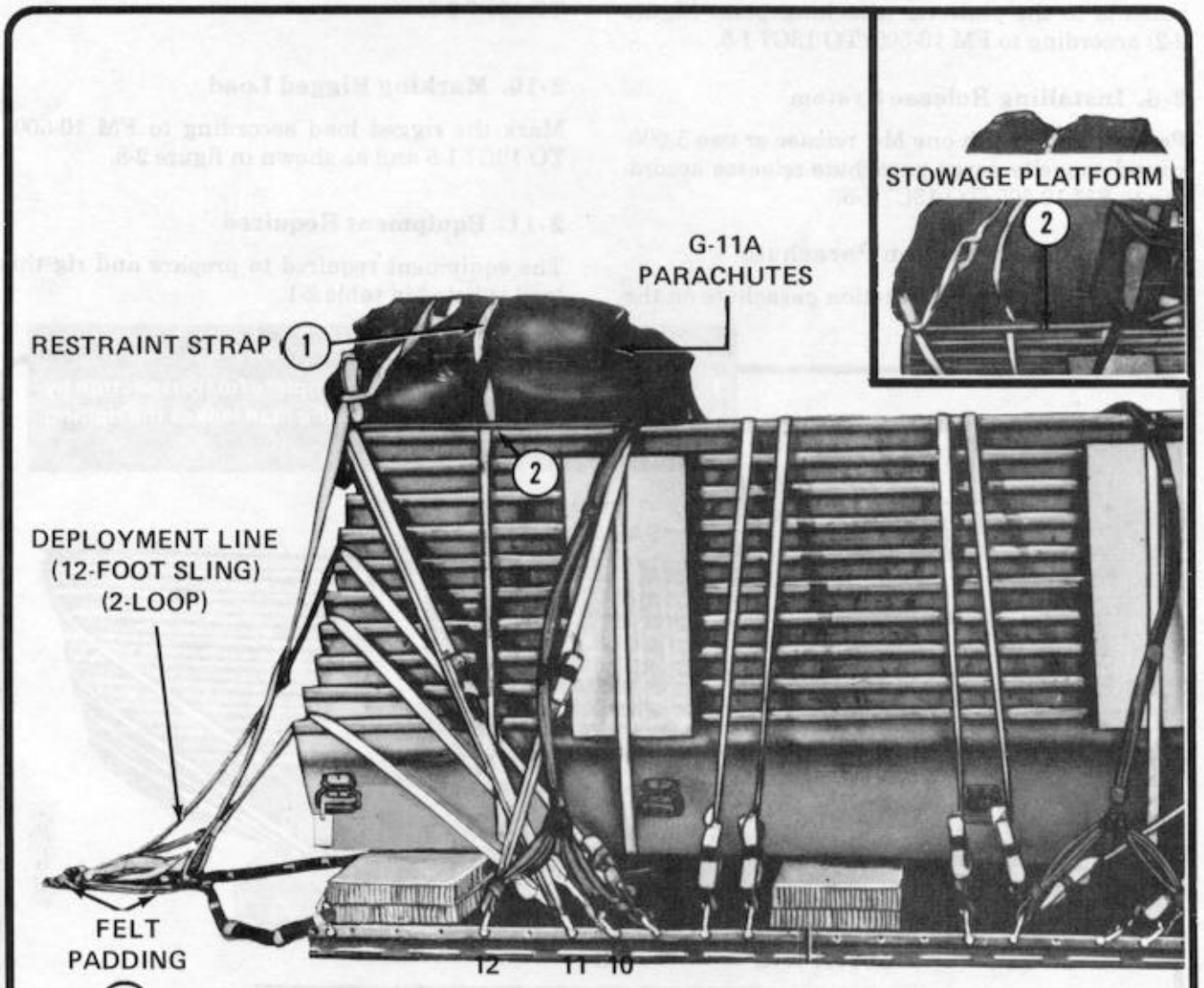

1. Install a 10-yard restraint strap according to FM 10-500/TO 13C7-1-5. Tie the restraint strap to clevises 12 and 12A.

2. Use a 3/4- by 48- by 66-inch sheet of plywood as a stowage platform. Drill 2-inch holes 3 inches from the front edge and 3 inches from the 48-inch sides of the stowage platform and 2-inch holes 3 inches from the rear edge and 3 inches from the 48-inch sides of the platform. Drill a third hole in the center of the 48-inch side of the stowage platform. Place the stowage platform on the rear of the top boat. Use four 15-foot tiedown straps to lash the stowage platform to tiedown clevises 11, 11A, 12, and 12A. Cross the stowage platform lashings.

Figure 2-7. Cargo parachutes stowed.

2-7. Installing Extraction System

Use a 60-inch connector strap and a 12-foot (3-loop) sling as a deployment line, install the static line/connector strap extraction system components to the platform attaching point (figure 2-2) according to FM 10-500/TO 13C7-1-5.

2-8. Installing Release System

Prepare and attach one M-1 release or two 5,000-pound capacity cargo parachute releases according to FM 10-500/TO 13C7-1-5.

2-9. Placing Extraction Parachute

Place a 15-foot cargo extraction parachute on the load for installation in the aircraft. Place the cargo extraction parachute according to the extraction parachute requirements shown in FM 10-500/TO 13C7-1-5.

2-10. Marking Rigged Load

Mark the rigged load according to FM 10-500/TO 13C7-1-5 and as shown in figure 2-8.

2-11. Equipment Required

The equipment required to prepare and rig this load is listed in table 2-1.

CAUTION

The rigged load MUST be given a complete final inspection by a qualified parachute rigger before the load leaves the rigging site.

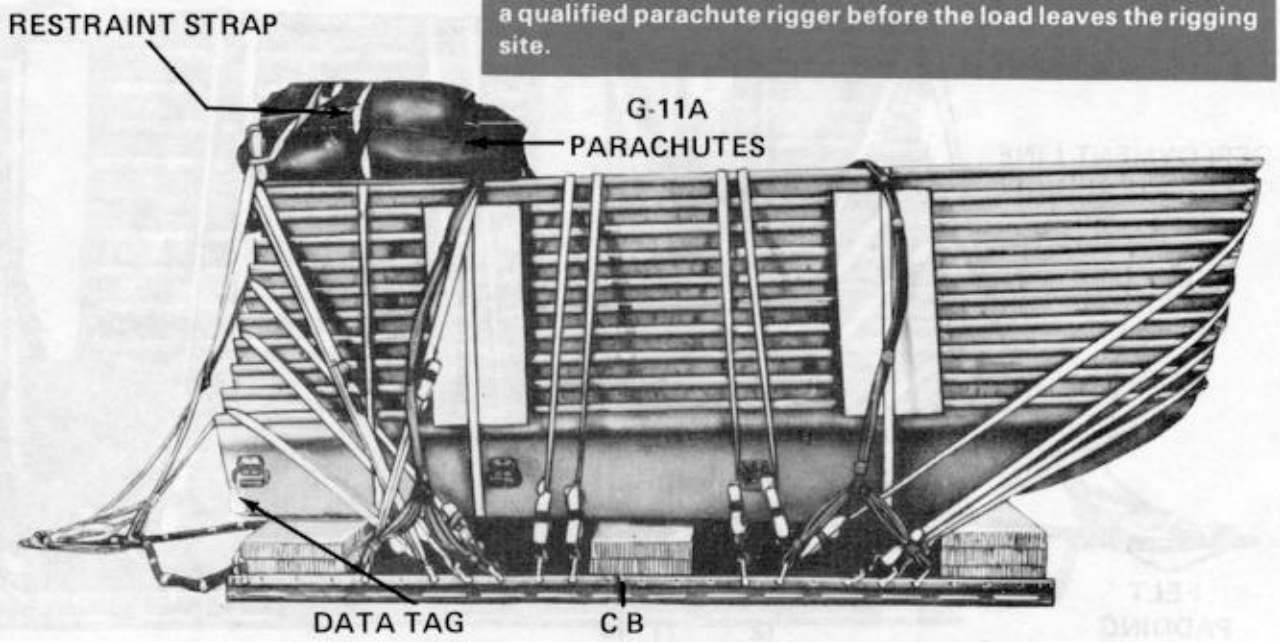

RIGGED LOAD DATA		
Weight	4,856	pounds
Height	89	inches
Width	108	inches
Length	208	inches
Overhang: Front	54	inches
Rear	10	inches
CB (from front edge of platform)	76	inches

Figure 2-8. Boats completely rigged.

Table 2-1. Equipment required for rigging 16-foot assault boats for a low-velocity airdrop

National Stock Number	Item	Quantity
8040-00-273-8713	Adhesive, paste, 1-gal	As required
1377-00-958-1048	Cartridge, time-delay, 20-second (use with 5,000-lb release)	2
1670-00-090-5354	Clevis assembly, suspension, large	5
4020-00-240-2146	Cord, nylon, type III, 550-lb	As required
1670-00-360-0328	Cover, clevis, large	2
8135-00-664-6958	Cushioning material, packaging, cellulose wadding	As required
8305-00-958-3685	Felt, 1/2- by 12-in	As required
1670-00-783-5988	Link assembly, type IV	1
1670-00-799-8596	Load coupler, 8-spool (use with 5,000-lb release)	1
5510-00-220-6146	Lumber, 2- by 4- by 60-in	2
1670-00-753-3928	Pad, energy-dissipating, honeycomb, 3- by 36- by 96-in:	3 sheets
	15- by 18-in	(18)
	18- by 35-in	(2)
	18- by 40-in	(4)
	18- by 96-in	(6)
	36- by 36-in	(2)
1670-00-269-1107	Parachute, cargo, 100-ft, G-11A	2
1670-00-052-1548	Parachute, cargo extraction, 15-ft	1
	Platform, airdrop, modular, type II, dual-rail system:	
1670-00-893-1631	Clevis, load tiedown	24
1670-00-893-1624	Panel	3
1670-00-893-1626	Rail, platform side, 12-ft	2

Table 2-1. Continued.

National Stock Number	Item	Quantity
5320-00-893-1632	Rivet, blind-drive type, 1/4-in diam (16 per panel)	48
5530-00-128-4981	Plywood, 3/4- by 48- by 66-in (stowage plywood)	1
1670-01-097-8816	Release, cargo parachute (If not available, two 5,000-lb capacity releases, NSN 1377-00-799-8494, may be used.)	1
	Sling, cargo, airdrop:	
1670-00-753-3788	3-ft (3-loop), type X or	6
1670-01-062-6301	3-ft (2-loop), type XXVI (Use two for 5,000-lb releases.)	6
1670-00-753-3790	9-ft (2-loop), type X or	2
1670-01-062-6304	9-ft (2-loop), type XXVI	2
1670-00-753-3792	12-ft (2-loop), type X or	5
1020-01-062-6303	12-ft (2-loop), type XXVI	5
1670-00-753-3794	20-ft (2-loop), type X or	2
1670-01-062-6302	20-ft (2-loop), type XXVI	2
1670-00-738-5878	Strap, connector, type X nylon webbing, 60-in	1
1670-00-998-0117	Static line, cargo parachute, breakaway-type, w release knife and clevis	2
1670-00-368-7486	Strap, webbing, nylon, 60-in (shear strap)	1
5510-00-197-5980	Strongback:	3
5510-00-220-6146	Lumber, 2- by 4- by 96-in	(15)
5315-00-010-4657	Nail, wire, steel, common 6d	As required
5530-00-262-8195	Plywood, 1/2- by 48- by 96-in	(6)
1670-00-937-0271	Tiedown assembly, 15-ft:	29
1670-00-937-0272	Binder, load	(17)
5365-00-937-0147	D-ring	(29)

Table 2-1. Continued.

National Stock Number	Item	Quantity
1670-00-937-0273	Strap, 15-ft	(29)
7510-00-266-5016	Tape, adhesive, 2-in	As required
8305-00-268-2411	Webbing, cotton, 80-lb	As required
8305-00-263-3591	Webbing, nylon, type VIII (parachute restraint strap)	10 yd

GLOSSARY

AFR	Air Force regulation	**in**	inch
AFTO	Air Force technical order	**lb**	pound
ATTN	attention	**NO**	number
CB	center of balance	**NSN**	national stock number
DA	Department of the Army	**TM**	technical manual
diam	diameter	**TO**	technical order
FM	field manual	**US**	United States
ft	feet/foot	**w**	with
gal	gallon	**yd**	yard

REFERENCES

AFR 71-4/TM 38-250	Packaging and Materials Handling: Preparation of Hazardous Materials for Transportation by Military Air Shipment
FM 10-500/TO 13C7-1-5	Airdrop of Supplies and Equipment: General Information for Rigging Airdrop Platforms
FM 10-553/TO 13C7-18-41	Airdrop of Supplies and Equipment: Rigging Ammunition
TM 10-1670-208-20&P/ TO 13C3-4-12	Organizational Maintenance Manual Including Repair Parts and Special Tools List for Platforms, Type II Modular and LAPES/ Airdrop Modular

FM 10-588/TO 13C7-28-21

29 MAY 1984

By Order of the Secretaries of the Army and the Air Force:

JOHN A. WICKHAM, JR.
General, United States Army
Chief of Staff

Official:

ROBERT M. JOYCE
Major General, United States Army
The Adjutant General

DISTRIBUTION:

Active Army, ARNG, and USAR: To be distributed in accordance with DA Form 12-11A, Requirements for Airdrop of Supplies and Equipment (Qty rqr block no. 228).

Additional copies may be requisitioned from the US Army Adjutant General Publications Center, 2800 Eastern Boulevard, Baltimore, MD 21220.

PIN: 055690-000