FM 10-500-66/TO 13C7-25-71

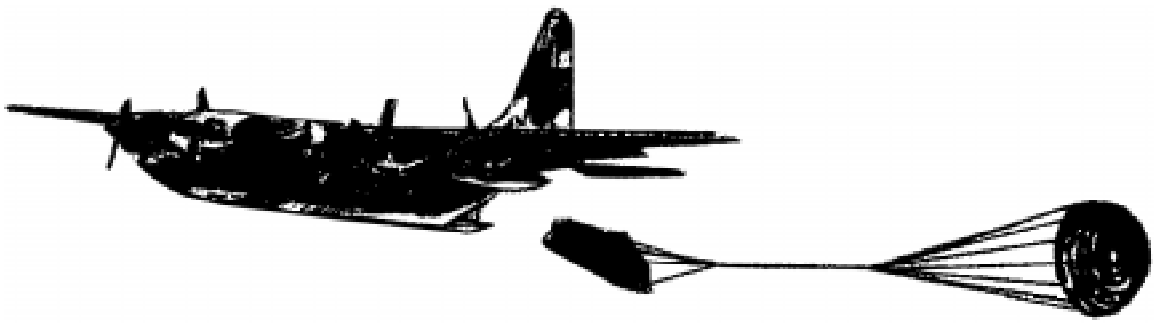

AIRDROP OF SUPPLIES AND EQUIPMENT:

RIGGING 2-LITTER ARMORED AMBULANCE (HMMWV)

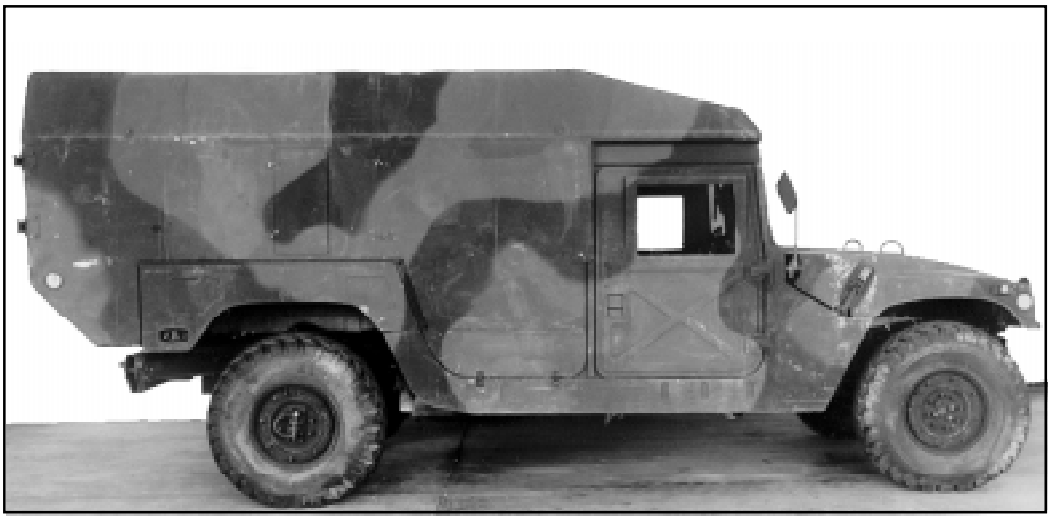

DISTRIBUTION RESTRICTION: Approved for public release; distribution is unlimited.

HEADQUARTERS
DEPARTMENT OF THE ARMY
DEPARTMENT OF THE AIR FORCE

FIELD MANUAL
NO 10-500-66
TECHNICAL ORDER
NO 13C7-25-71

HEADQUARTERS
DEPARTMENTS OF THE ARMY
AND THE AIR FORCE
Washington, DC, 6 August 1999

AIRDROP OF SUPPLIES AND EQUIPMENT: RIGGING 2-LITTER ARMORED AMBULANCE (HMMWV)

CONTENTS

Page

PREFACE ii

CHAPTER 1 INTRODUCTION
Description of Items....1-1
Special Considerations....1-1

CHAPTER 2 RIGGING THE M996 AMBULANCE ON A 20-FOOT, TYPE V PLATFORM FOR LOW-VELOCITY AIRDROP
Description of Load....2-0
Preparing Platform....2-0
Preparing and Positioning Honeycomb Stacks....2-2
Installing Drive-Off Aids on Platform....2-5
Preparing Ambulance....2-6
Lifting and Positioning Ambulance....2-17
Lashing Ambulance....2-20
Installing Suspension System....2-22
Installing Cargo Parachutes....2-30
Installing Extraction System....2-32
Installing Parachute Release....2-33
Installing Provisions for Emergency Restraints....2-33
Placing Extraction Parachute....2-33
Marking Rigged Load....2-34
Equipment Required....2-34

GLOSSARY....**Glossary-1**
REFERENCES....**References-1**

DISTRIBUTION RESTRICTION: Approved for public release; distribution is unlimited.

---

* This publication supercedes FM 10-500-66/TO 13C7-25-71, dated 16 September 1991.

PREFACE

SCOPE

This manual tells and shows how to rig the M996 2-litter armored ambulance (HMMWV). The ambulance can be low-velocity airdropped from C5, C-17, C-130, and C-141 aircraft.

USER INFORMATION

The proponent of this publication is HQ TRADOC. You are encouraged to report any errors or omissions and to suggest ways of making this a better manual.

Army personnel, send your comments on DA Form 2028 directly to:

Director
Aerial Delivery and Field Services Department
USA Quartermaster Center and School
1010 Shop Road
Fort Lee, Virginia 23801-1502

Air Force personnel, send your reports on AFTO Form 22 through:

Headquarters
Air Mobility Command (AMC/DOKT)
402 Scott Drive, Unit 3AI
Scott AFB, Illinois 62225-5302

Air Force personnel in Special Operations Command, send your reports on AFTO Form 22 through:

HQ AFSOC/DOXT
100 Bartley Street, Suite 260
Hurlburt Field, FL 32544-5273

to:

Director
Aerial Delivery and Field Services Department
USA Quartermaster Center and School
1010 Shop Road
Fort Lee, Virginia 23801-1502

Also send an information copy of AFTO Form 22 to:

SA-ALC/TILDP
485 Quentin Roosevelt Road
Kelly AFB, Texas 78241-5000

Chapter 1

Introduction

DESCRIPTION OF ITEM

1-1. The M996, 2-litter, armored ambulance (HMMWV) weighs 7,180 pounds with the fuel tank no more than 3/4 full. The vehicle is 203 inches long, 87 inches high, and 86 inches wide. The body configuration makes other uses of this vehicle possible, such as specialized communication or command and control functions.

SPECIAL CONSIDERATIONS

1-2. Special considerations for this manual are described below.

- The loads covered in this manual may include hazardous materials as defined in AFJMAN 24-204/TM 38-250. If included, the hazardous materials must be packaged, marked, and labeled as required by AFJMAN 24-204/TM 38-250.

- Be sure that a vehicle rigged using these procedures is the same vehicle shown and described in this manual. Be sure that any equipment rigged inside the vehicle is restrained and protected.

- A copy of this manual must be available to the joint airdrop inspectors during the before- and after-loading inspections.

Chapter 2

Rigging the M996 Ambulance on A 20-Foot, Type V Airdrop Platform for Low-velocity Airdrop

DESCRIPTION OF LOAD

2-1. The M996 ambulance (shown in Figure 2-1) is rigged on a 20-foot, type V airdrop platform for low-velocity airdrop. The load requires two or three G-11 cargo parachutes, depending upon the accompanying load in the vehicle.

PREPARING PLATFORM

2-2. Prepare a 20-foot, type V airdrop platform as shown in Figure 2-2.

- Inspecting Platform. Inspect, or, assemble and inspect, the platform according to TM 10-1670-268-20&P/TO 13C7-52-22.
- Installing SuspensionLinks**.** Install the suspension links as described in Figure 2-2.
- Installing Tandem Links**.** Install tandem links as shown in Figure 2-2.
- Attaching and Numbering Clevises**.** Attach and number 26 clevis assemblies as shown in Figure 2-2.

NOTES:
1. The nose bumper may or may not be installed.
2. Measurements given in this load are from the front edge of the platform, NOT from the front edge of the nose bumper.

Figure 2-1. M996 2-litter Armored Ambulance

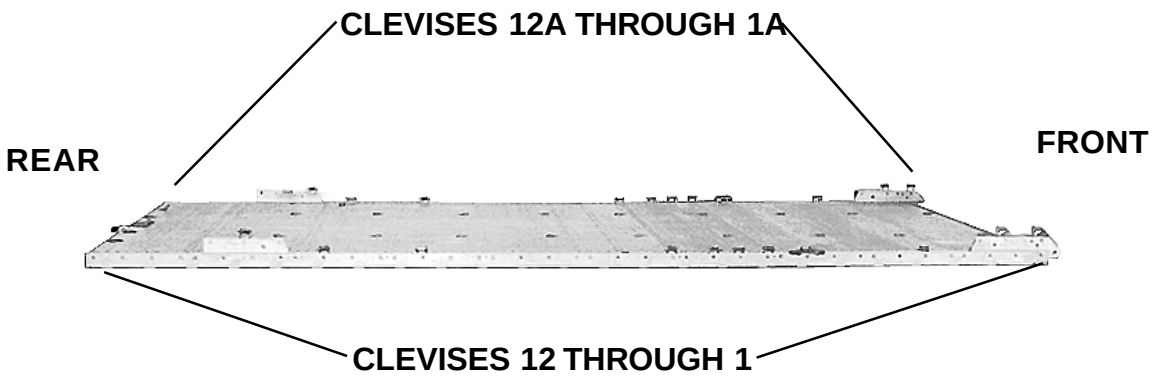

Step:

1. Install a tandem link to the front of each platform side rail using holes 1, 2, and 3.

2. Install a suspension link to each side rail using holes 33, 34, and 35.

3. Install a clevis on bushings 1 and 3 on each tandem link.

4. Install a clevis on bushing 2 on each suspension link.

5. Install a clevis on bushing 11 in an inverted position on each platform side rail. Bolt two additional clevises to each inverted clevis.

6. Starting at the front of each platform side rail, install clevises on the bushings bolted on holes 6, 13, 14, 15, 17, 27, and 31.

7. Starting at the front of the platform, number the clevises 1 through 12 on the right side and 1A through 12A on the left side.

8. Label the tie-down rings according to FM 10-500-2/TO 13C7-1-5.

Figure 2-2. Platform Prepared

BUILDING AND POSITIONING HONEYCOMB STACKS

2-3. Build the honeycomb stacks as shown in Figures 2-3 and 2-4. Position the honeycomb stacks as shown in Figure 2-5.

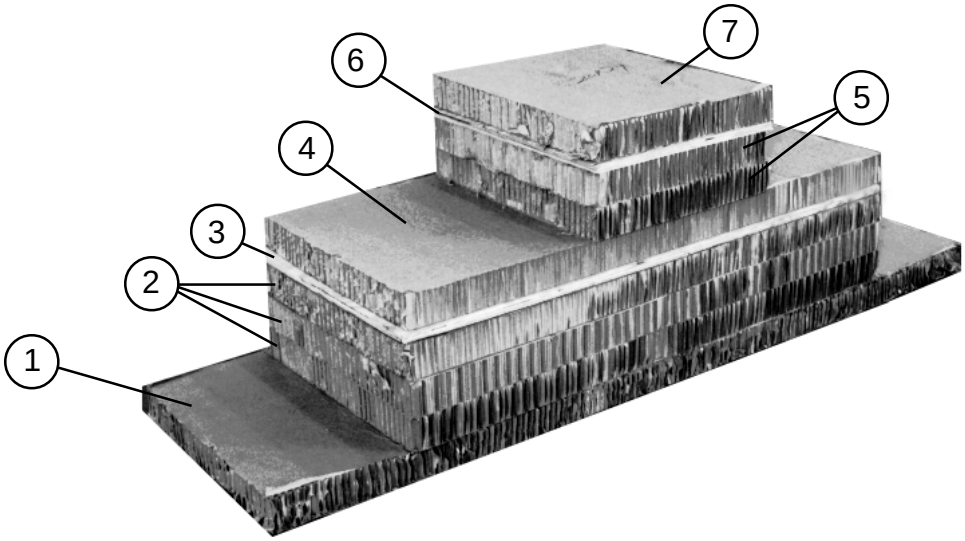

1 Use an 80- by 24-inch piece of honeycomb to form a base.

2 Center and glue three 54- by 24-inch pieces of honeycomb on the base.

3 Place and glue a 3/4- by 54- by 24-inch piece of plywood over the honeycomb placed in step 2 above.

4 Place and glue one 54- by 24-inch piece of honeycomb on top of the plywood placed in step 3 above.

5 Center and glue two 20- by 24-inch pieces of honeycomb on top of the honeycomb placed in step 4 above.

6 Place and glue a 3/4- by 20- by 24-inch piece of plywood over the honeycomb placed in step 5 above.

7 Place and glue one 20- by 24-inch piece of honeycomb on top of the plywood placed in step 6 above.

Figure 2-3. Stacks 1 and 3 Prepared

Notes: 1. This drawing is not to scale.
2. All dimensions are in inches.

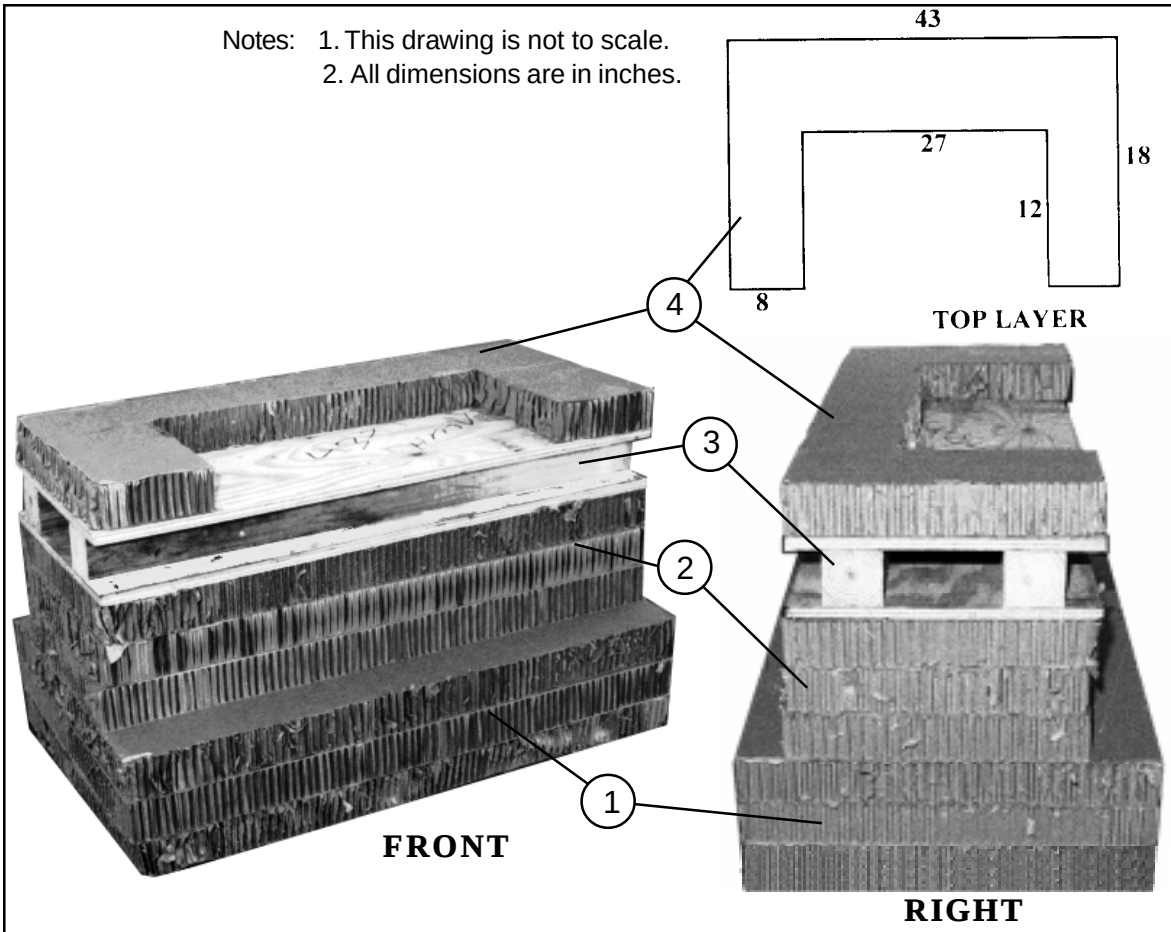

1. Glue three 43- by 26-inch pieces of honeycomb flush together to form a base.

2. Center and glue three 43- by 18-inch pieces of honeycomb flush on the base.

3. Nail a 43-inch piece of 4- by 4-inch lumber parallel to each long side and 1 1/2 inches from each long edge of a 3/4- by 43- by 18 inch piece of plywood. Nail a second 3/4- by 43- by 18-inch piece of plywood to the lumber and flush with the bottom piece of plywood. Glue the wood section of the stack flush on the honeycomb placed in step 2 above.

4. Make the cutout as shown in a 43- by 18-inch piece of honeycomb. Glue the honey comb flush over the plywood.

Figure 2-4. Stack 2 Prepared

Notes: 1. This drawing is not to scale.
2. All dimensions are given in inches.

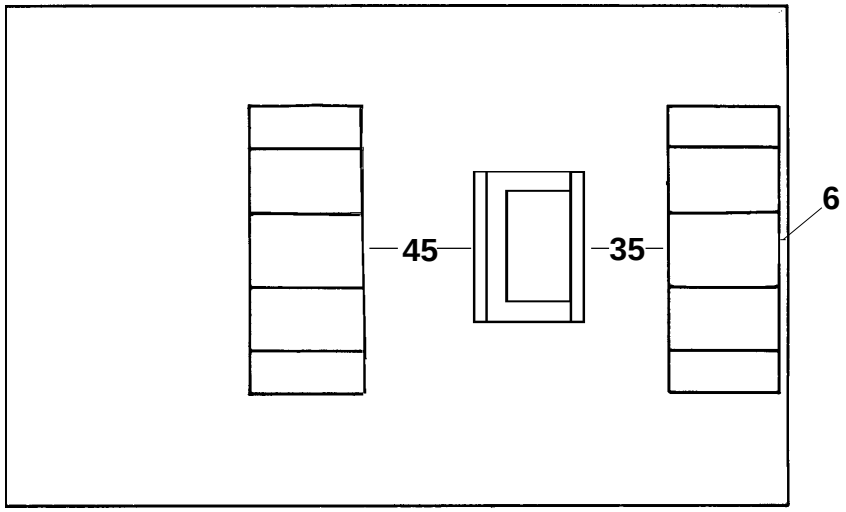

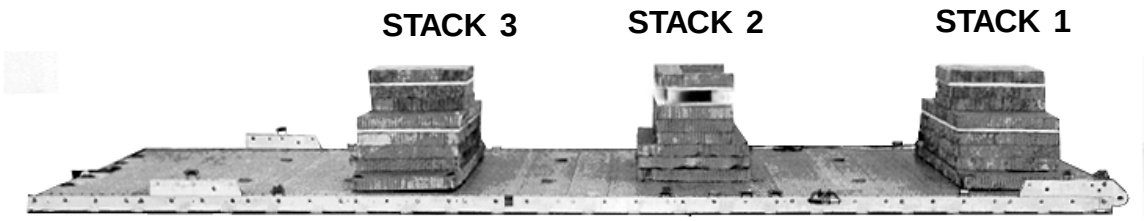

Stack Number	Position of Stack on Platform
1	Position stack 1 centered and 6 inches from the front edge of the platform.
2	Position stack 2 centered and 35 inches from stack 1.
3	Position stack 3 centered and 45 inches from stack 2.

Figure 2-5. Honeycomb Stacks Positioned

INSTALLING DRIVE-OFF AIDS ON PLATFORM

2-4. Install the drive-off aids on the platform as shown in Figure 2-6.

Note: The use of drive-off aids is optional.

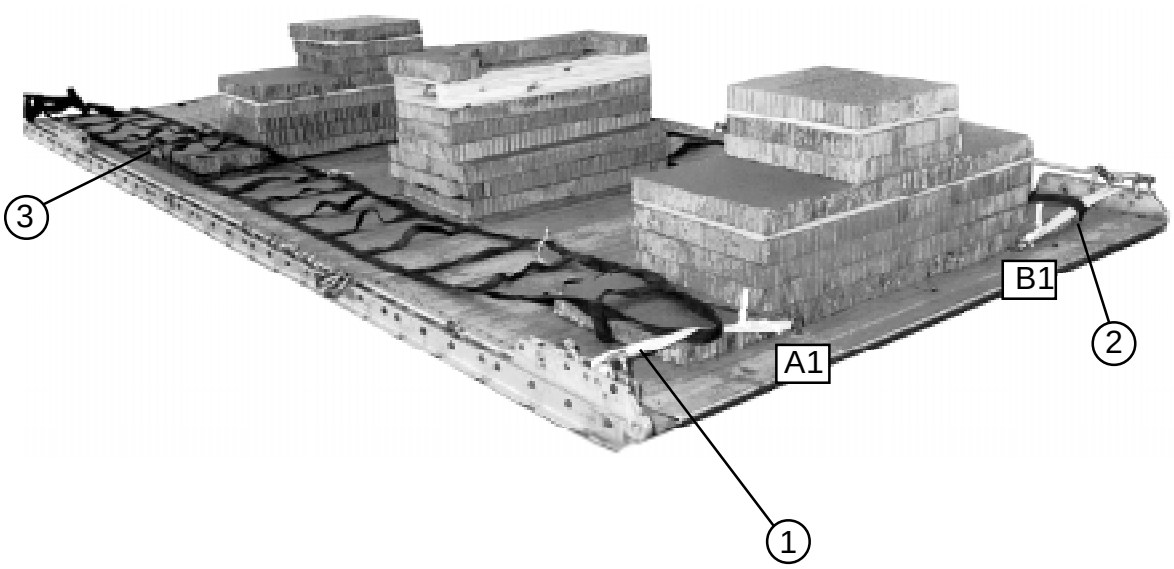

1. Pass a 45-inch length of type V or 1-inch tubular nylon webbing through tie-down ring A1, through the end loop of a drive-off aid, and around the second bushing of the right tandem link. Knot the webbing according to FM 10-500-2/TO 13C7-1-5.

2. Repeat step 1 for the left side, using tie-down ring B1 and the second bushing of the left tandem link.

3. Extend the drive-off aids to the rear, over stacks 1 and 3. Secure the drive-off aids to clevises and bushings with type I, 1/4-inch cotton webbing.

Figure 2-6. Drive-off Aids Installed on Platform

PREPARING AMBULANCE

2-5. Prepare the ambulance as described below.

- Make sure the fuel tank is no more than 3/4 full. Secure the filler cap as shown in Figure 2-7. Tape the fuel tank drain plug as shown in Figure 2-8.

- Make sure the batteries and battery compartment comply with AFJMAN 24-204/TM 38-250.

- Stow the ambulance OVE equipment in the compartment behind the driver's door. Fill the empty space with honeycomb, and close the compartment door. Tape the latches.

- Prepare the cab of the ambulance as shown in Figure 2-9.

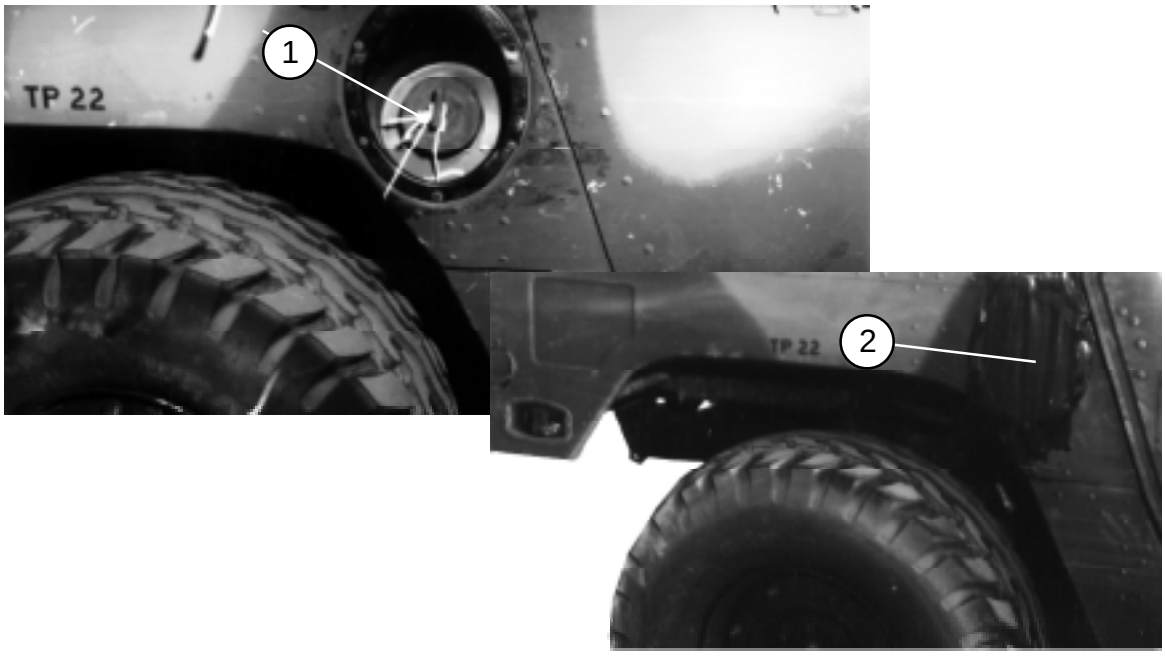

1 Screw the fuel filler cap firmly in place and tie it to the body of the ambulance with type III nylon cord.

2 Tape the fuel filler opening.

Figure 2-7. Filler Cap Secured

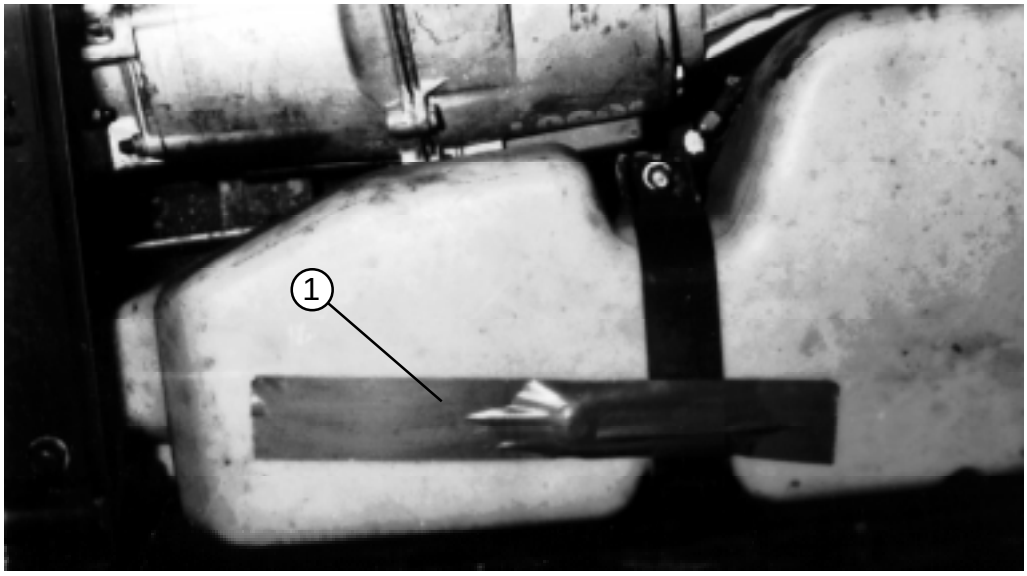

(1) Place a 12-inch length of cloth-backed tape over the fuel tank drain plug.

Figure 2-8. Fuel Tank Drain Plug Prepared

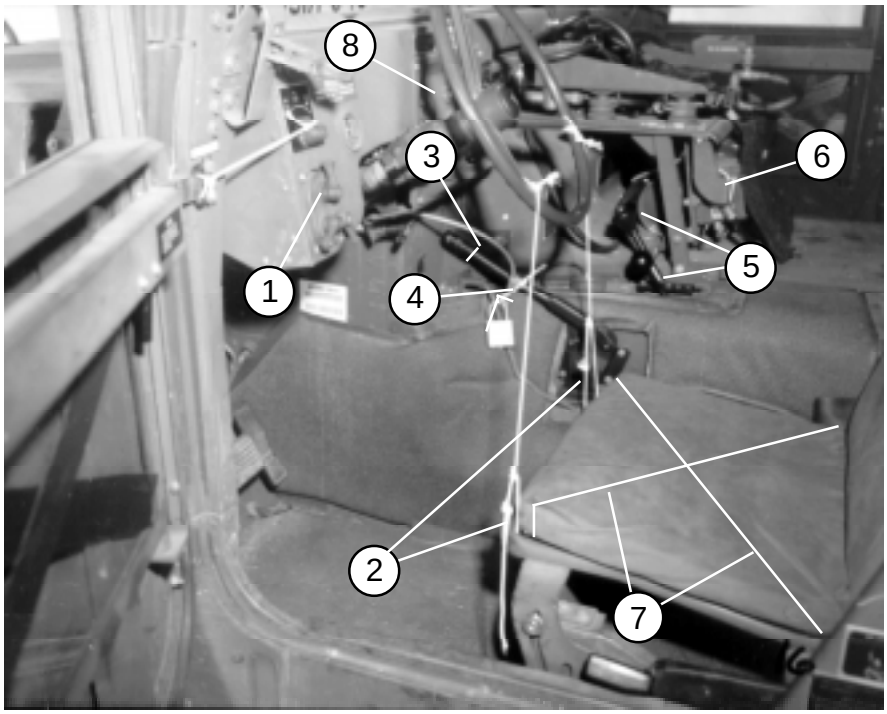

1. Tie the engine switch in the STOP position with type I, 1/4-inch cotton webbing.
2. Tie the steering wheel to the seat frame in two places with type III nylon cord.
3. Tie the emergency brake handle in the OFF position with type III nylon cord.
4. Secure the steering wheel locking cable and padlock to the emergency brake handle with type III nylon cord.
5. Place the transmission lever and four-wheel-drive lever in the NEUTRAL positions.
6. Tie the fire extinguisher in place under the radio mount with two lengths of type III nylon cord.
7. Tie the seat cushions to the seat frames with type II nylon cord.
8. Tape all instrument panel gauges.

Figure 2-9. Cab Prepared

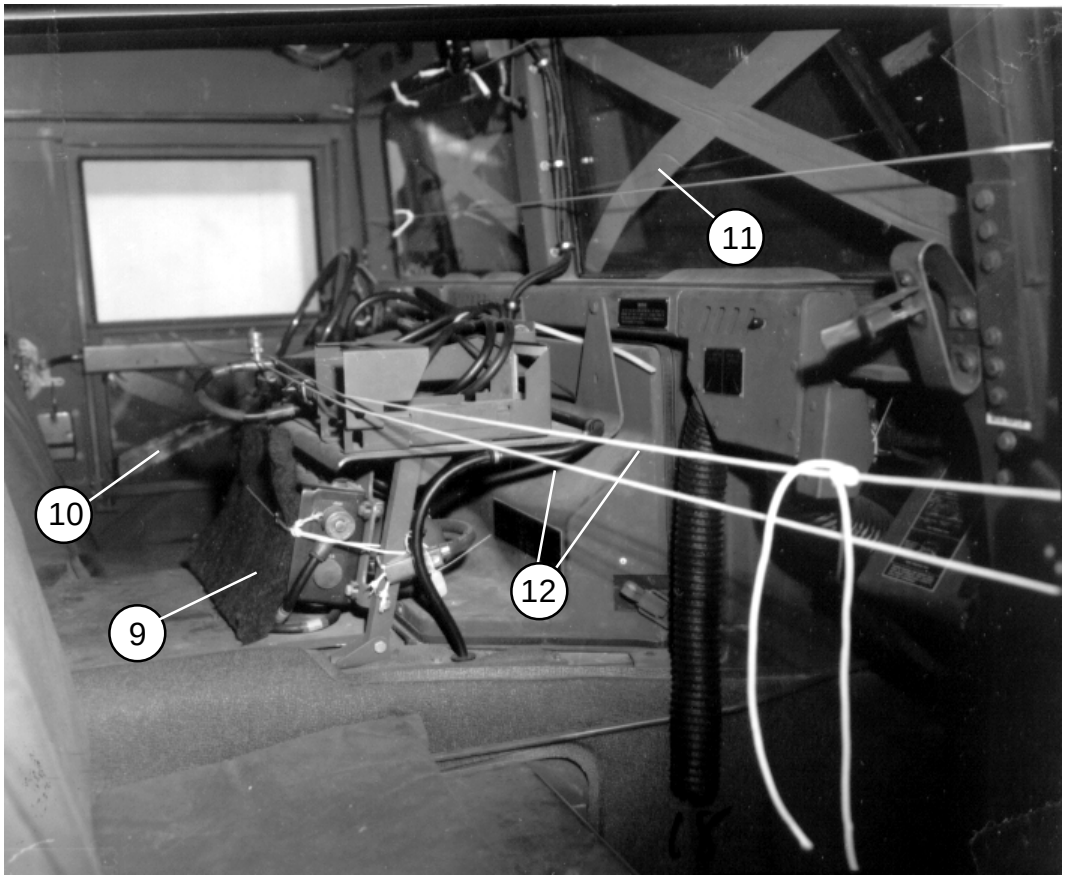

(9) Pad the face of the radio with felt. Tie the felt to the radio mount supports with type III nylon cord.

Note: Pad the controls of any other radio equipment in the same way. Tie larger radios to their mounts with 1/2-inch tubular nylon webbing.

(10) Tape the side windows on both sides and lower them.

(11) Tape the windshield on both sides.

(12) Tie the doors shut with type III nylon cord.

Figure 2-9. Cab Prepared (continued)

•Prepare the underside of the ambulance as shown in Figure 2-10.

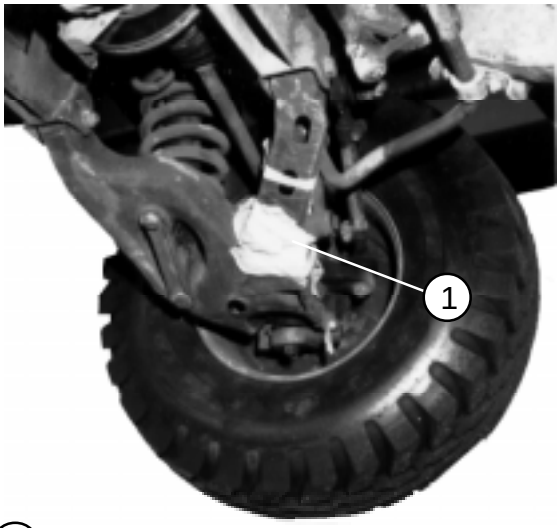

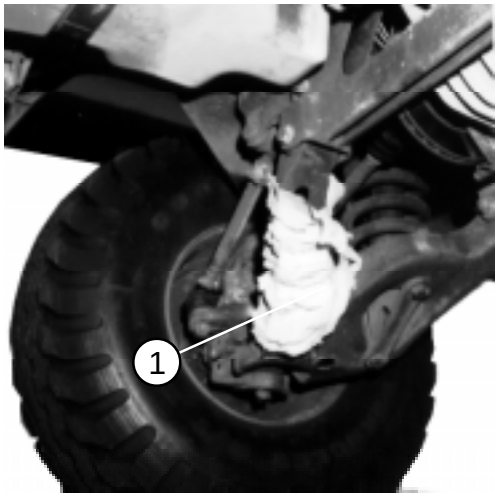

(1) Pad the lower control arms on the front and rear of the truck with cellulose wadding. Tape the wadding in place.

(2) Pass a 15-foot lashing over the right frame rail, under the oil pan, and over the left frame rail. Make sure the wires running along the frame rail are to the outside of the lashing. Place a 12- by 12-inch piece of honeycomb and a 2- by 6- by 16-inch piece of lumber between the lashing and oil pan. Fasten the lashing with a D-ring and a load binder.

(3) Install another lashing just to the rear of the lashing installed in step 2 above. Make sure the lashing goes over the exhaust pipe and then under it.

Figure 2-10. Underside of Ambulance Prepared

•Prepare the front of the ambulance as shown in Figure 2-11.

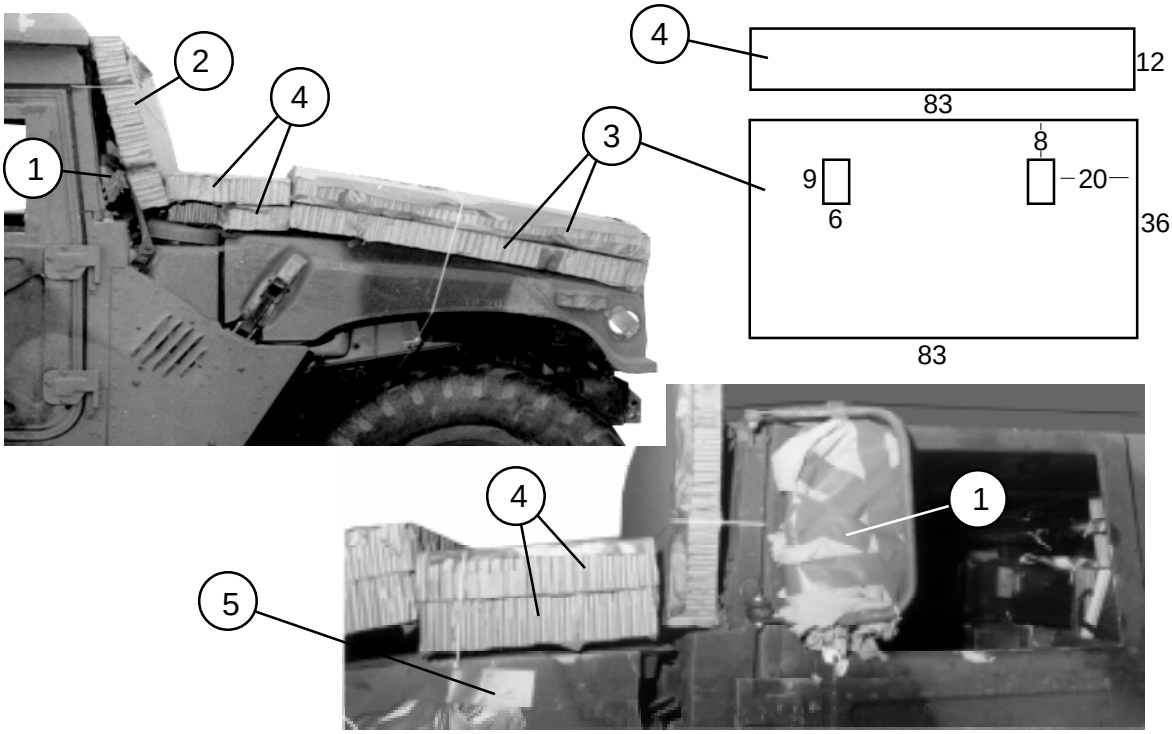

1 Pad the mirrors with cellulose wadding. If the mirrors are on single posts, fold them inward over the windshield and tie them together. If the mirrors are supported on brackets at the top and bottom, fold them inward against the doors. Tie them together inside the cab.

2 Tie a 21- by 83-inch piece of honeycomb over the windshield with type III nylon cord.

3 Make cutouts in two 36- by 83-inch pieces of honeycomb as shown, and place the honeycomb on the hood. Tie the honeycomb in place with a length of type III nylon cord tied to the upper control arms.

4 Place two 12- by 83-inch pieces of honeycomb between the windshield and the pieces of honeycomb placed in step 3 above. Make a cutout 10 inches wide and 5 inches long in the bottom piece to clear the air breather cap.

5 Tape the hood latches.

Figure 2-11. Honeycomb Placed on Front of Ambulance and Mirrors Folded

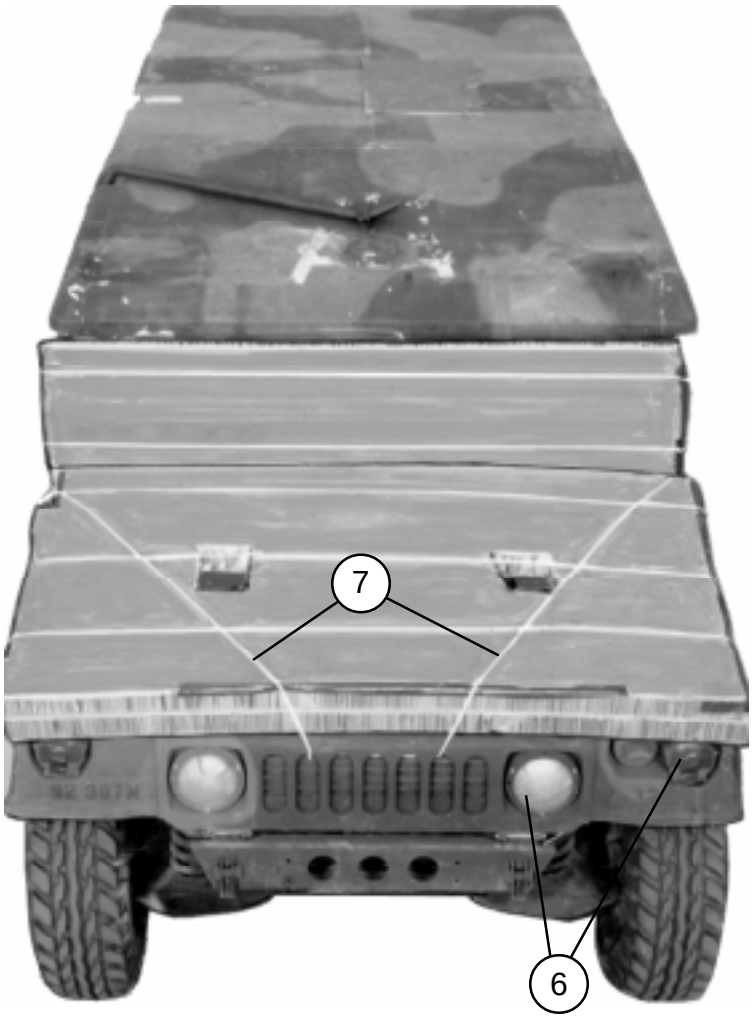

6 Tape all lights and reflectors.

Note: Burlap or sandbag material may be placed over the headlights and held in place by the headlight securing rings.

7 Run a length of type III nylon cord through the grille as shown. Run each free end over the honeycomb placed in steps 3 and 4 above. Tie the ends to the mirror supports or the upper door hinges.

Figure 2-11. Honeycomb Placed on Front of Ambulance and Mirrors Folded (continued)

•Prepare and secure the pioneer tool kit as shown in Figure 2-12.

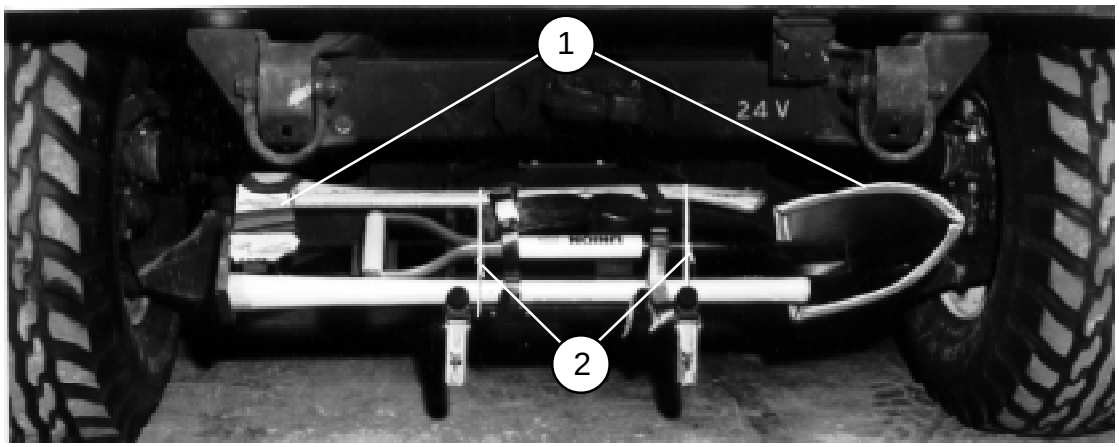

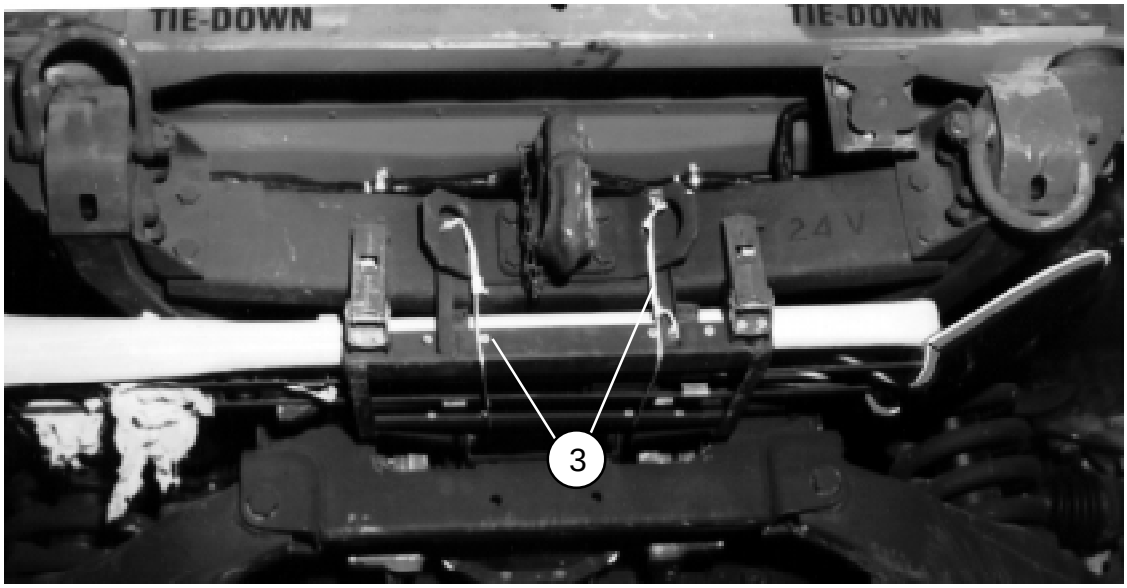

1. Tape all the sharp edges of the pioneer tools. Pad the ax head with cellulose wadding.
2. Place the pioneer tools in their rack. Secure the tools with their retainer straps. Tie the tools in place with type III nylon cord.
3. Close and latch the tool rack. Tie the rack closed with type III nylon cord.

Figure 2-12. Pioneer Tool Kit Secured

•Prepare the ambulance body as shown in Figures 2-13 and 2-14.

WARNING
Lowering the steps at the rear of the ambulance from inside may cause serious injury. Lower the steps from outside the ambulance. Use one hand to activate the release, and control the descent of the step assembly with the other hand.

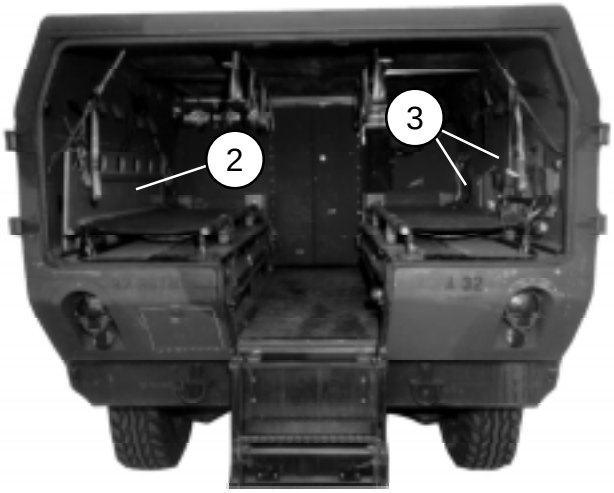

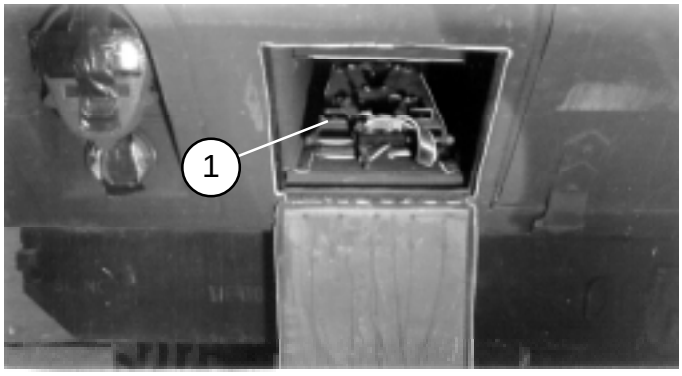

1. Secure the splints in their storage compartment. Use the securing straps provided.
2. Secure the long backboard against the left wall with the straps provided.
3. Secure the short backboard and traction splint against the right wall with the straps provided.

Note: Reinforce the straps with type III nylon cord.

Figure 2-13. Medical Equipment Secured

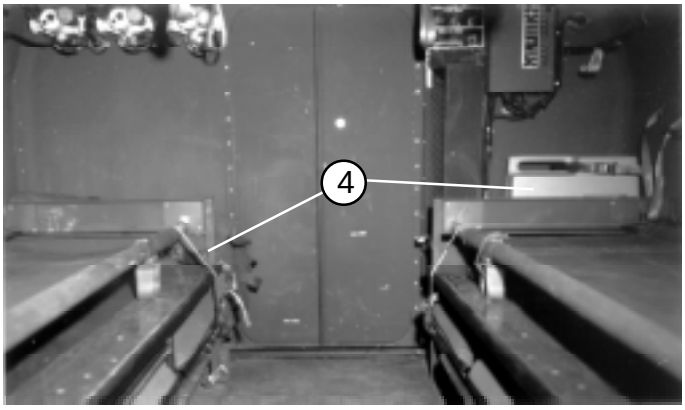

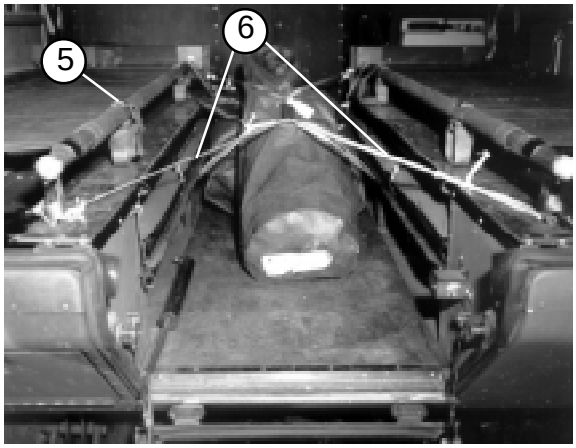

(4) Secure the blanket set in the left front compartment and the resuscitator kit box in the right front compartment. Use the straps provided.

(5) Secure the two litters with the straps provided.

(6) Place the camouflage net and pole bags in the center of the floor. Secure them to the litter tie-down brackets and to the shelf supports with 1/2-inch tubular nylon webbing.

Note: Medical equipment may be different, depending upon the needs of the medical unit. Tie additional equipment, such as water cans, securely to stationary points in the ambulance with 1/2-inch tubular nylon webbing.

Figure 2-13. Medical Equipment Secured (continued)

1. Close and latch the doors.
2. Make an indentation in the center of an 18- by 18-inch piece of honeycomb to fit the door handle. Secure the honeycomb to the door handle with two lengths of type III nylon cord.
3. Tape the medical identification panel latches on the rear and sides of the ambulance.

Figure 2-14. Doors Secured and Latches Covered

LIFTING AND POSITIONING AMBULANCE

2-6. Prepare the suspension sling spreader bar provided with the ambulance as shown in Figure 2-15. Substitute an ACB as a suspension sling spreader only if the spreader bar is not available. Install slings for lifting the ambulance and a suspension sling spreader bar for the the rear lifting slings as shown in Figure 2-16. Position the ambulance on the honeycomb stacks as shown in Figure 2-17.

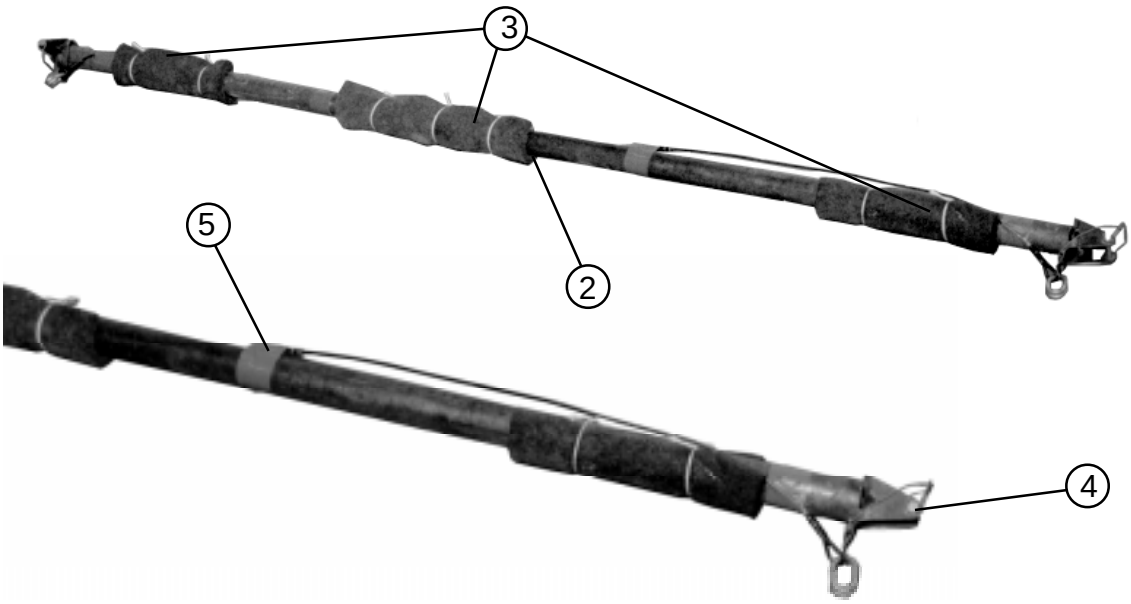

1. Extend the spreader bar to 100 1/2 inches. Position the spreader bar so that the cable split rings face downward.
2. Face the suspension sling brackets downward. Insert the bar extension lock pin 44 1/2 inches from the smaller end of the bar. Tape the pin in place (not shown).
3. Cut three pieces of 7- by 15-inch felt. Place one piece 8 inches from each end of the bar. Place one piece centered on the bar. Secure the felt in place with type III nylon cord.
4. Install the suspension sling retainer pins in each end.
5. Tape the ends of the spreader bar cables to the bar.

Figure 2-15. Spreader Bar Prepared

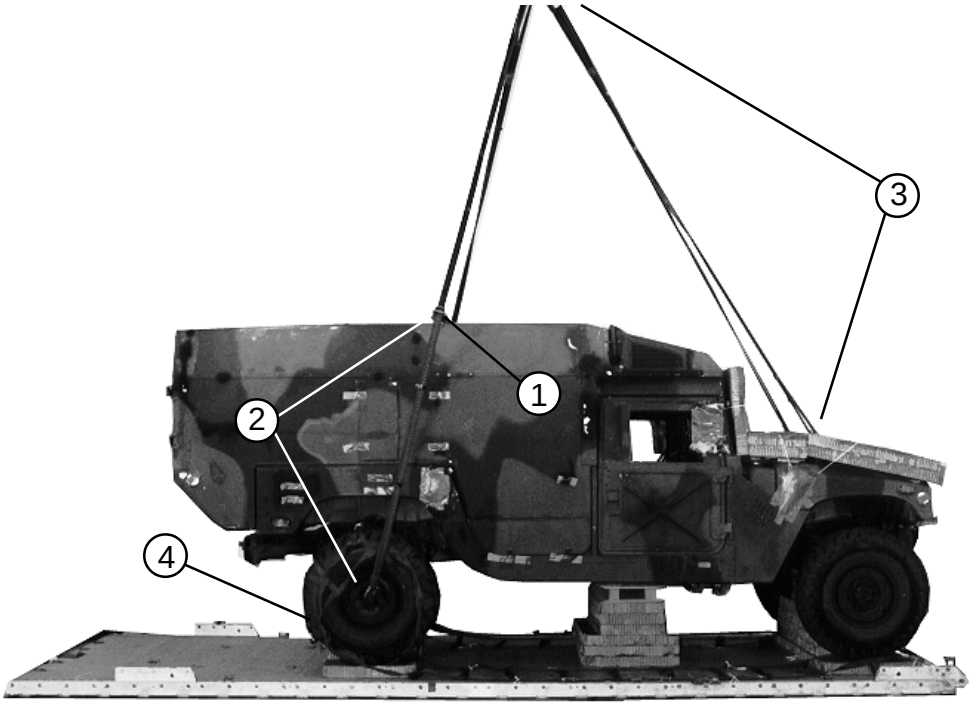

1. Center the suspension sling spreader bar or an ACB across the roof. If the ACB is used, tie a piece of plywood or felt to the ACB to prevent damage to the roof.

2. Attach a 16-foot (2-loop), type XXVI nylon webbing sling to each rear wheel shackle. Pass the slings up through the suspension sling brackets on the spreader bar or through the square holes of the ACB.

3. Attach a 12-foot (2-loop), type XXVI nylon webbing sling to each airlift bracket with a large suspension clevis. Pass a 3-foot (2-loop), type XXVI nylon webbing sling through the end loops of both front lifting slings. Place both loops of the 3-foot sling in the crane hook.

4. Lift the ambulance and suspend it slightly above the honeycomb stacks. Place a drive-off aid under the right rear wheel. Holding the drive-off aid against the wheel, turn the wheel clockwise until the drive-off aid is under slight tension. Repeat for the other side, but turn the wheel counterclockwise. Tie the end loop of each drive-off aid to the nearest cross piece with a double length of type I, 1/4-inch cotton webbing.

Figure 2-16. Lifting Slings Installed, Ambulance Lifted, and Drive-off Aids Installed

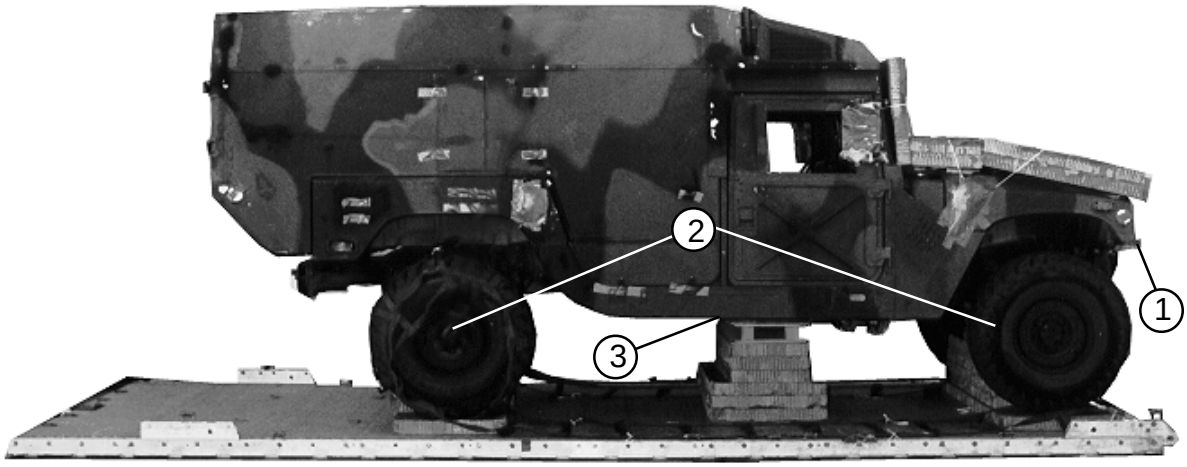

1. Center the ambulance on the platform with the front of the ambulance 2 inches from the front edge of the platform.
2. Make sure that the suspension cross members rest squarely on stacks 1 and 3.
3. Make sure that the frame rails rest squarely on stack 2.
4. Remove the lifting slings and the spreader bar or ACB (not shown).

Figure 2-17. Ambulance Positioned

LASHING AMBULANCE

2-7. Lash the ambulance to the platform as shown in Figures 2-18 and 2-19.

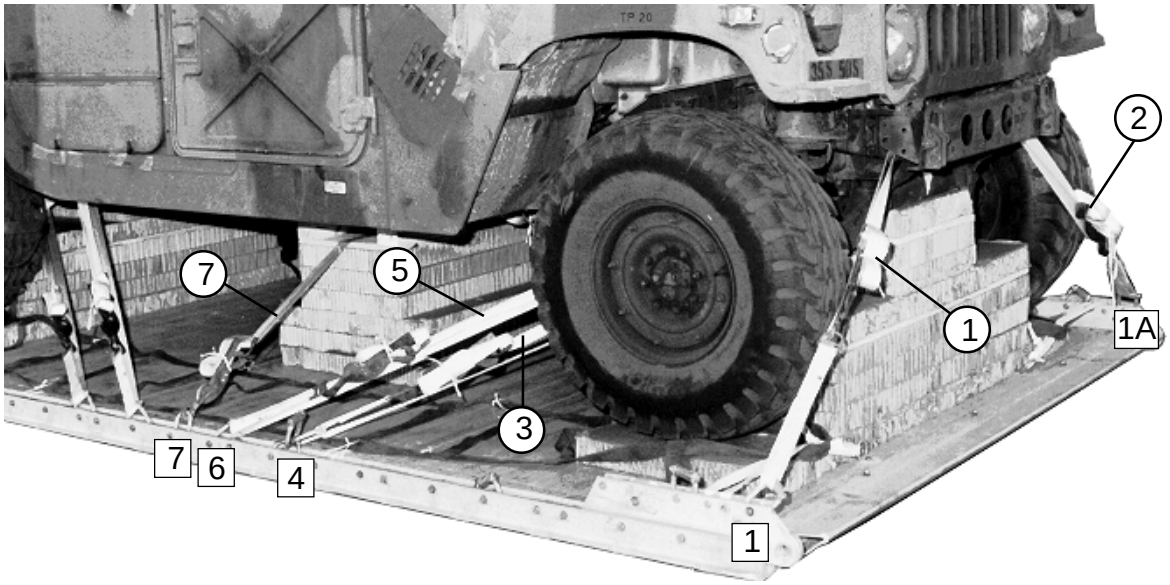

Lashing Number	Tie-down Clevis Number	Instructions
		Pass lashing:
1	1	Through tie-down bracket on end of right frame rail.
2	1A	Through tie-down bracket on end of left frame rail.
3	4	Around right lower control arm.
4	4A	Around left lower control arm.
5	6	Through tie-down bracket behind right front coil spring.
6	6A	Through tie-down bracket behind left front coil spring.
7	7 and 7A	Pass a 15-foot lashing through clevis 7A and through its own D-ring. Pass the lashing through the hole in stack 2. Attach the lashing to clevis 7 with a load binder.

Figure 2-18 . Lashings 1 Through 7 Installed

Note: Although the lashing order deviates from normal numerical order, it allows for easier installation of the lashings.

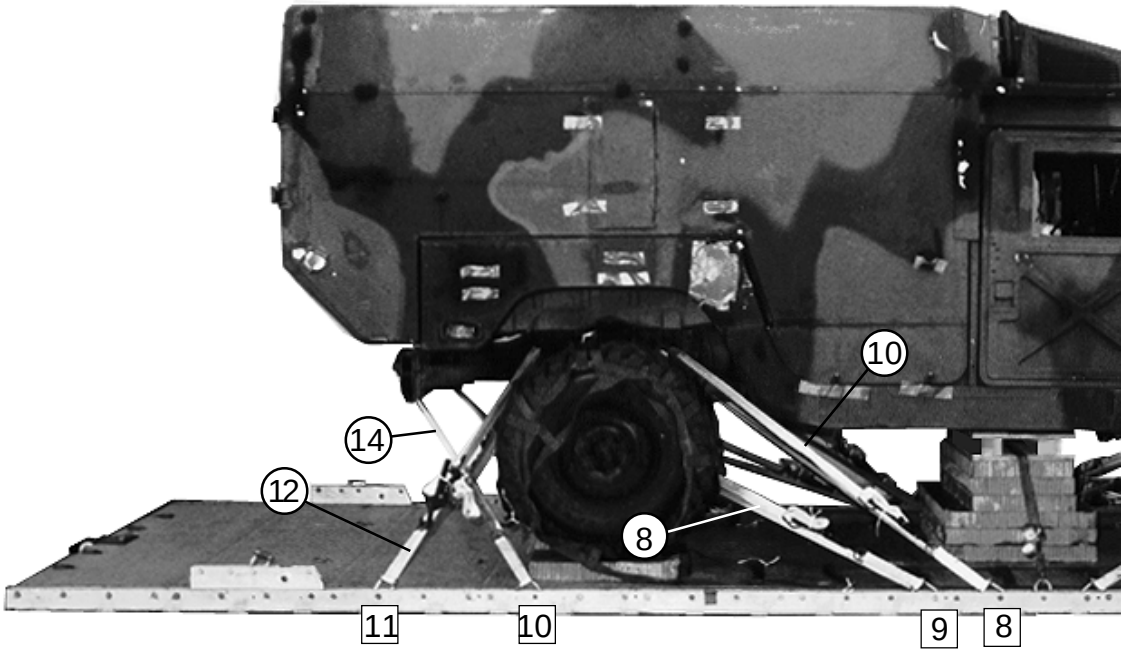

Lashing Number	Tie-down Clevis Number	Instructions
		Pass lashing:
8	9	Around right rear lower control arm.
9	9A	Around left rear lower control arm.
10	8	Through tie-down bracket in front of right rear coil spring.
11	8A	Through tie-down bracket in front of left rear coil spring.
12	11	Through tie-down bracket behind right rear coil spring.
13	11A	Through tie-down bracket behind left rear coil spring.
14	10	Through tie-down shackle on right side of bumper.
15	10A	Through tie-down shackle on left side of bumper.

Figure 2-19. Lashings 8 Through 15 Installed

INSTALLING SUSPENSION SYSTEM

2.8. Install the suspension system as given below:

- Install the roof covers and ACB supports as shown in Figure 2-20.
- Install the ACB to the front of the ambulance as shown in Figure 2-21.

Note: Do NOT use the suspension sling spreader bar on the front of the ambulance. Use only the ACB.

- Lash the front ACB to the platform as shown in Figure 2-22.
- Install the suspension sling spreader bar to the rear of the ambulance as shown in Figure 2-23.
- Install the suspension slings and the deadman's tie as shown in Figure 2-24.
- Only if the suspension sling spreader bar is not available, install an ACB to the rear of the ambulance and secure it with lashings as shown in Figure 2-25.

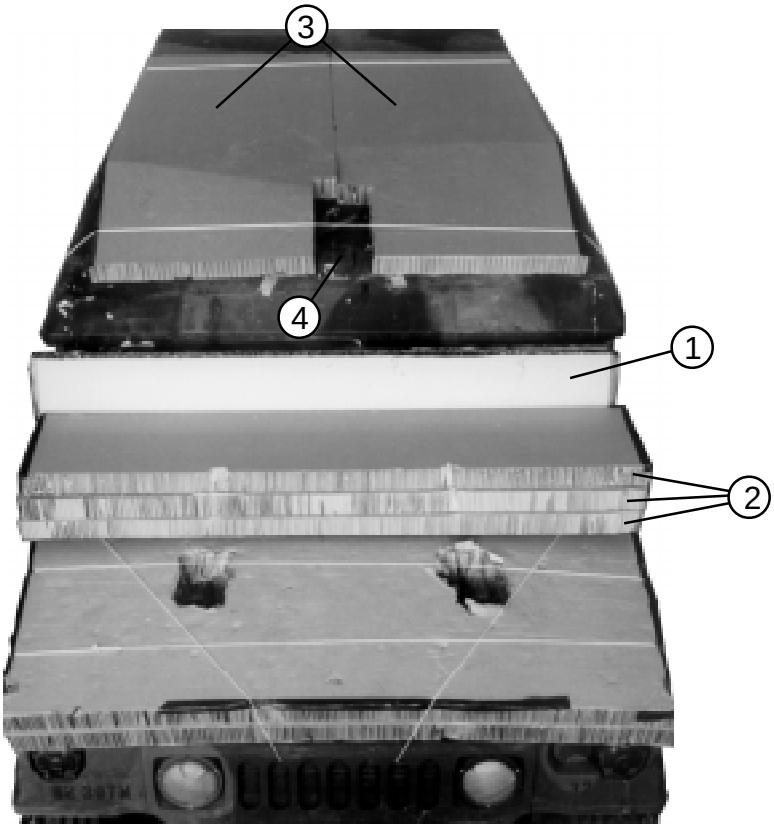

1. Place a 16- by 82-inch piece of honeycomb over the piece of honeycomb covering the windshield. Tie the honeycomb in place with type III nylon cord.

2. Stack three 18- by 82-inch pieces of honeycomb against the piece of honeycomb placed in step 1 above.

3. Cover the front of the roof with two 36- by 96-inch pieces of honeycomb, with the front edge of the honeycomb 6 inches from the front edge of the roof.

4. Make a 10- by 20-inch cutout in the honeycomb as shown to allow for fixtures on the roof. Tie the honeycomb to convenient points on the load with type III nylon cord.

Note: Tape the edges of the honeycomb where the type III nylon cord passes over it.

Figure 2-20. Roof Cover and ACB Supports Installed

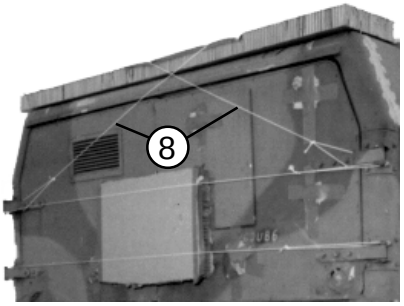

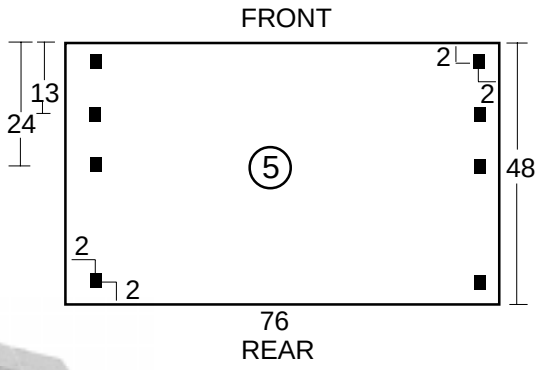

Note: 1. This drawing is not to scale.
2. All dimensions are in inches.

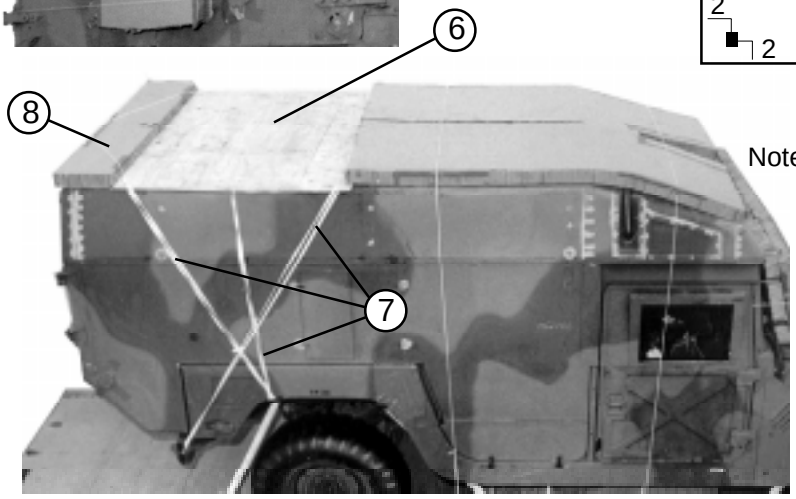

(5) Drill eight 1/2-inch holes in a 3/4- by 48- by 76-inch piece of plywood as shown.

(6) Cover the rear of the ambulance roof with the plywood so that the front edge of the plywood extends under the honeycomb and the rear edge is 12 inches from the rear edge of the roof.

(7) Secure the plywood to the roof with 1/2-inch tubular nylon webbing as follows: from the front holes in the plywood to the rear bumpers, from the rear holes to the tie-down brackets in front of the rear coil springs, and from the center holes to the tie-down brackets behind the rear coil springs.

(8) Place a 76- by 12-inch piece of honeycomb across the roof against the rear edge of the plywood. Tie the honeycomb to the rear door hinges and to the rear holes in the plywood with type III nylon cord.

Figure 2-20. Roof Cover and ACB Supports Installed (continued)

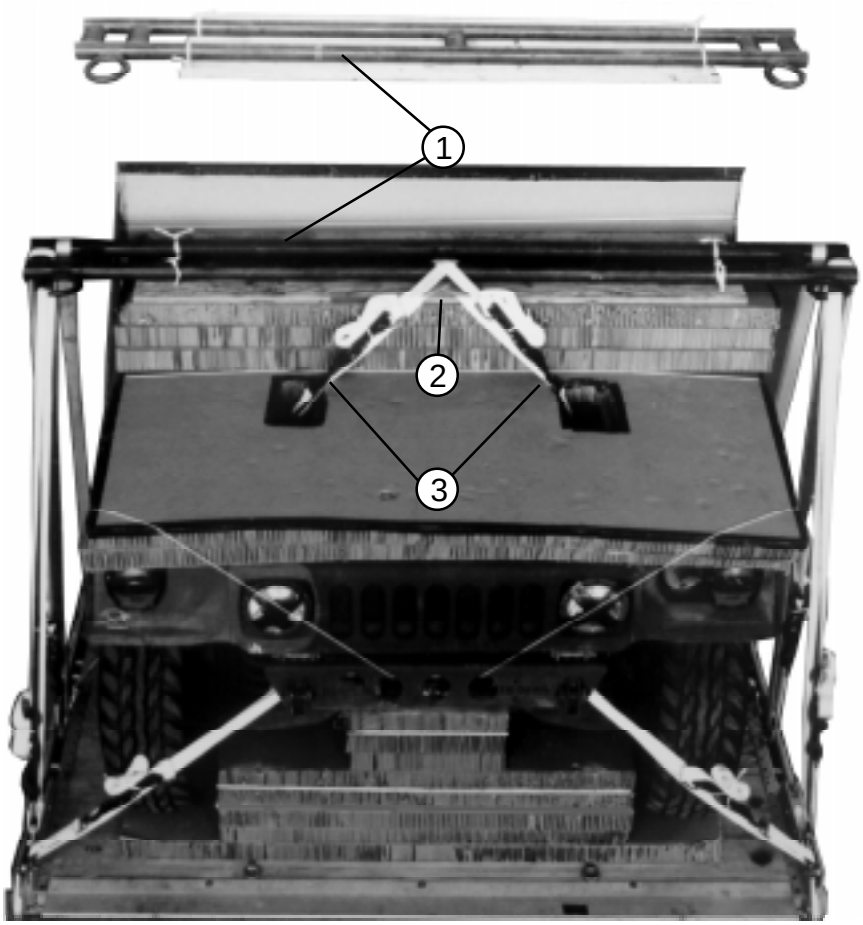

1. Drill a 1/2-inch hole one inch from each corner of a 3/4- by 15- by 76-inch piece of plywood. Tie an ACB to the plywood with 1/2-inch tubular nylon webbing.

2. Center the ACB and plywood on the honeycomb stack on the front of the ambulance with the rings facing the front.

3. Run a 15-foot lashing from each airlift bracket around the center bar of the ACB.

Figure 2-21. ACB Installed on Front of Ambulance

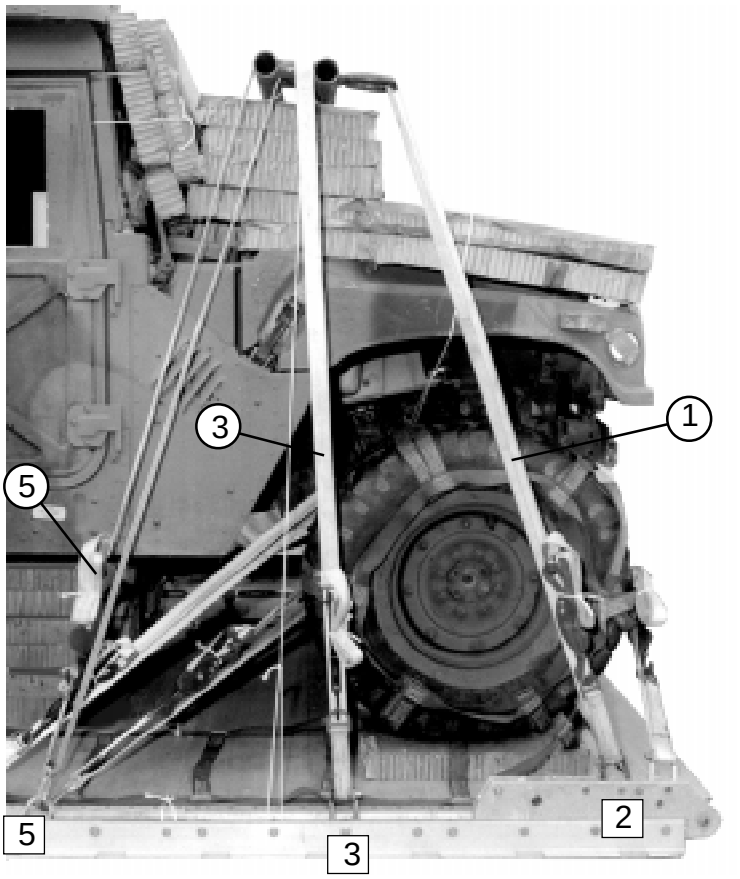

Lashing Number	**Tie-down** Clevis Number	**Instructions**
		Pass lashing:
1	2	Through ring of ACB.
2	2A	Through ring of ACB.
3	3	Through square hole of ACB.
4	3A	Through square hole of ACB.
5	5	Around rear bar of ACB.
6	5A	Around rear bar of ACB.

Figure 2-22. ACB Lashed to Platform

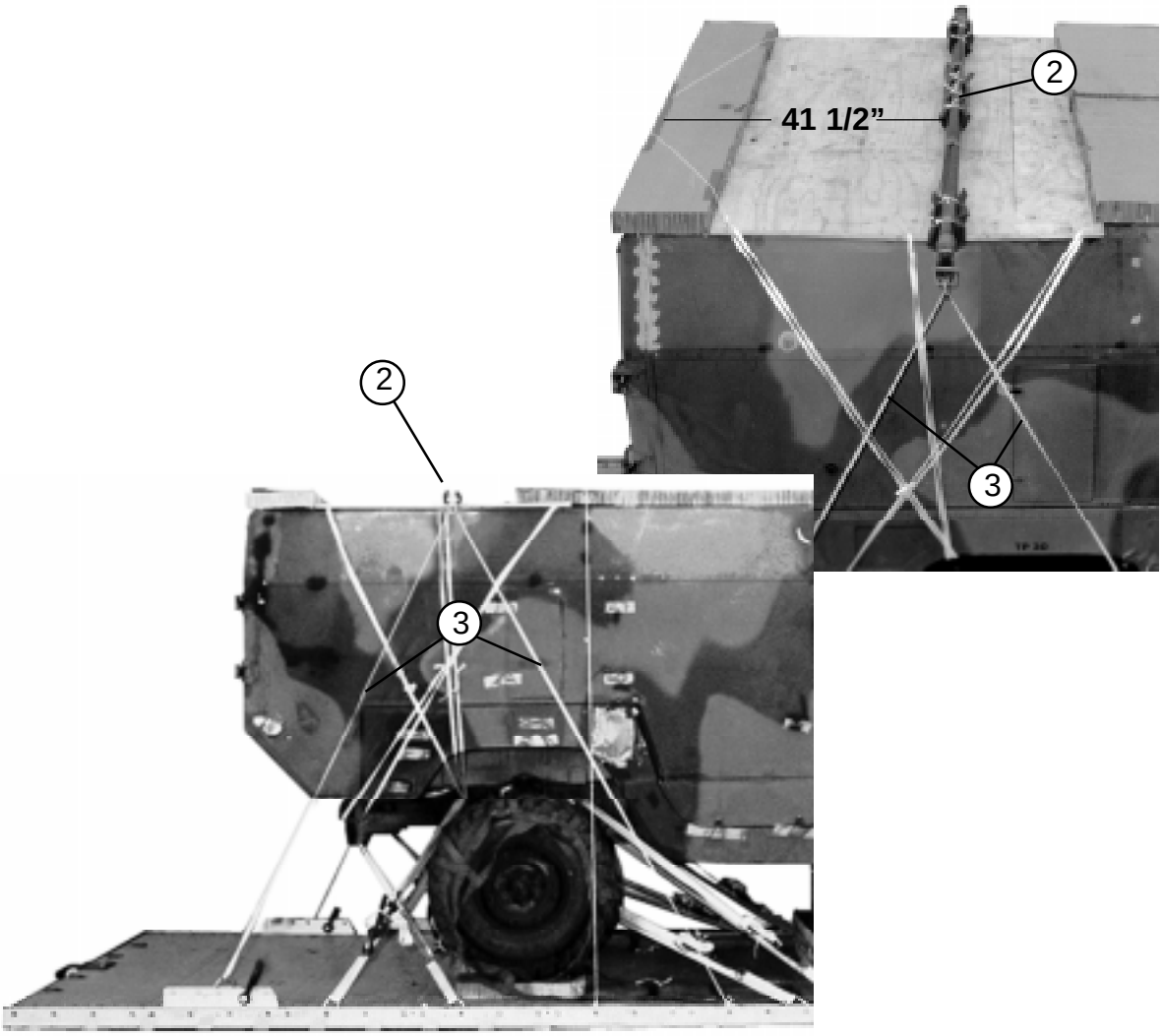

1. Prepare the suspension sling spreader bar as shown in Figure 2-15.
2. Center the spreader bar across the plywood and 41 1/2 inches from the rear edge of the roof.
3. Tie a length of 1/2-inch tubular nylon webbing to clevises 12 and 12A. Pass the webbing up through the cable rings on the spreader bar and down to bushing 19 on each side of the platform.

Figure 2-23. Suspension Sling Spreader Bar Installed

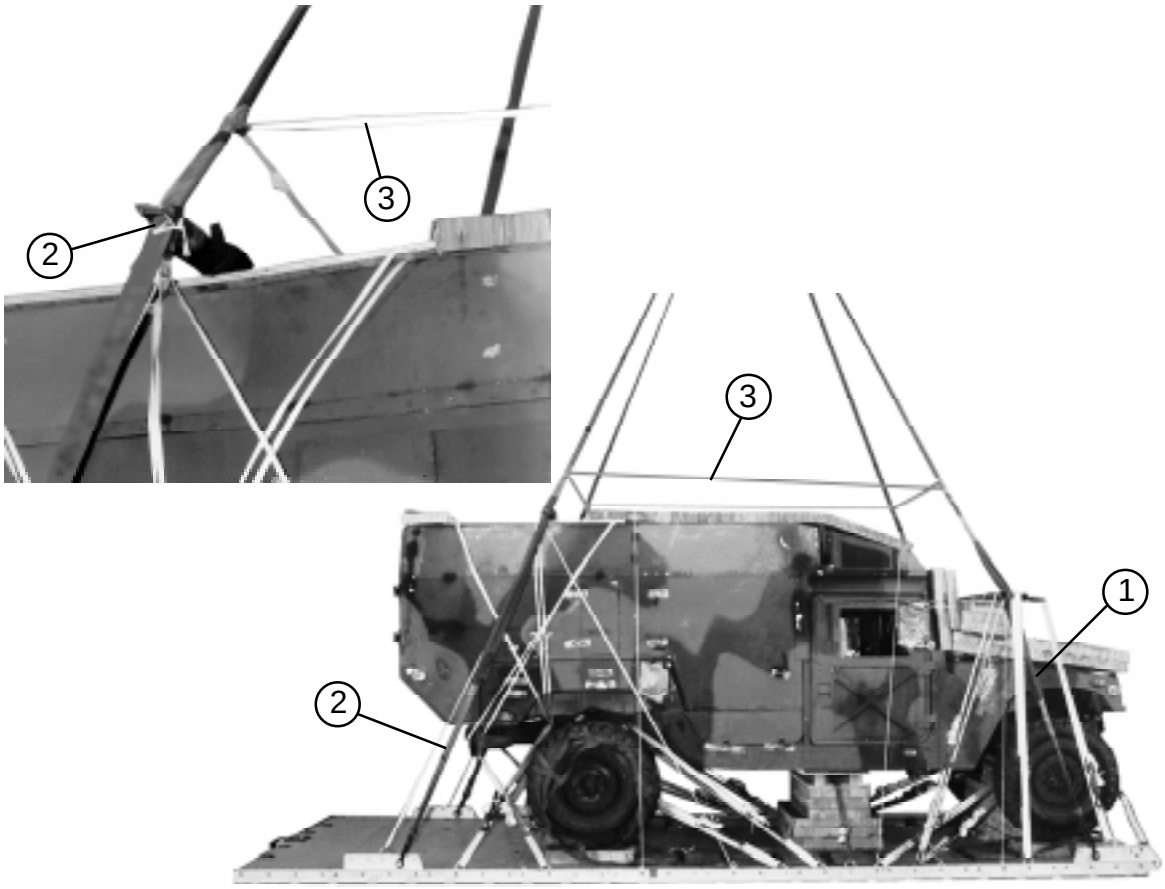

1 Attach a 20-foot (2-loop), type XXVI nylon webbing sling to each front tandem link with a large clevis. Install a suspension sling sleeve to protect the slings where they contact the truck fender and ACB. Extend the slings upward through the square holes in the ACB, and safety the slings to the ACB with type I, 1/4-inch cotton webbing.

2 Attach a 20-foot (2-loop), type XXVI nylon webbing sling to each rear suspension link with a large clevis. Install a suspension sling sleeve to protect the slings from contact with the spreader bar and the ambulance. Run the rear suspension slings up through the suspension sling brackets in the spreader bar. Safety the rear slings to the spreader bar with type I, 1/4-inch cotton webbing.

3 Install the deadman's tie according FM 10-500-2/TO 13C7-1-5.

Figure 2-24. Suspension Slings and Deadman's Tie Installed with the Spreader Bar

Note: This is an alternative method to be used only when the spreader bar is not available.

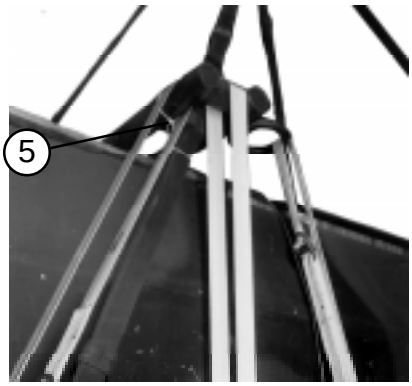

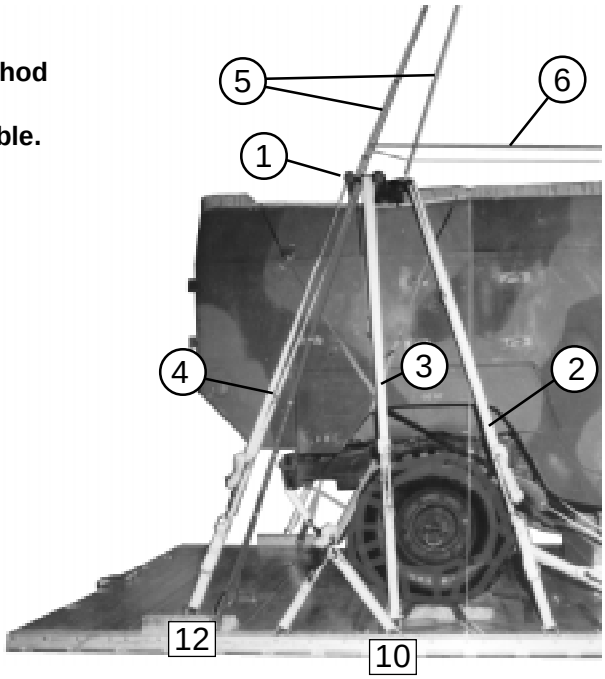

(1) Center the ACB on the plywood, with the rings facing the front. Tie the ACB to the plywood through the second and third holes with 1/2-inch tubular nylon webbing.

(2) Add a clevis to bushing 22 on each side of the platform. Lash the ACB rings to the clevis added to bushing 22 with 30-foot lashings.

(3) Add a clevis to clevises 10 and 10A. Lash the center bar of the ACB to these added clevises with 15-foot lashings.

(4) Lash the rear bar of the ACB to clevises 12 and 12A with 30-foot lashings.

Note: Be sure that the lashings are not so tight that they cause the roof to buckle.

(5) Install four 20-foot (2-loop), type XXVI nylon webbing suspension slings as shown in Figure 2-24. Extend the rear slings up thought the square holes in the rear ACB's. Safety the rear slings to the ACB's with type III nylon cord.

(6) Install the deadman's tie according to FM 10-500-2/TO 13C7-1-5.

Figure 2-25. ACB Used as Alternative to Spreader Bar

STOWING CARGO PARACHUTES

2-9. Prepare and install the parachute stowage platform as shown in Figure 2-26. Weigh the load and install the correct number of parachutes according to FM 10-500-2/TO 13C7-1-5. The load shown in Figure 2-27 requires three G-11 cargo parachutes.

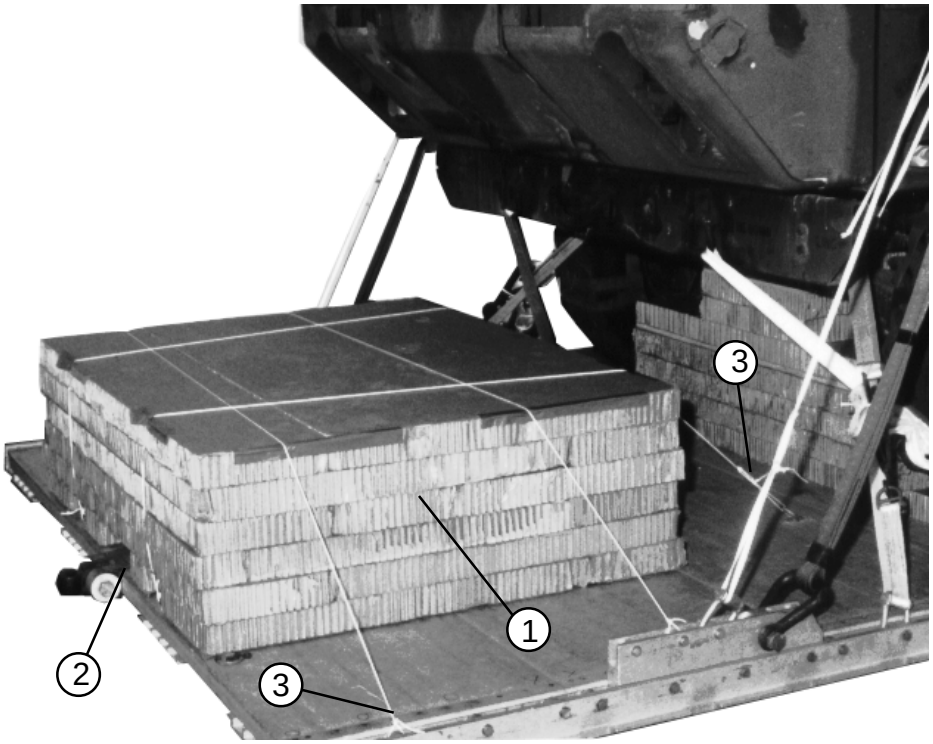

1. Alternate six pieces of honeycomb 60- by 36 inches and six pieces 60- by 12 inches to make a six-layer stack 60 inches wide and 48 inches long. Glue the layers together.
2. Center a 60-inch edge flush with the rear edge of the platform. Cut a 5- by 12-inch section from the honeycomb over the extraction bracket nuts to allow for inspection.
3. Secure the stack to the platform with type III nylon cord tied to convenient tie-down rings, clevises, or bushings.

Figure 2-26. Parachute Stowage Platform Prepared and Installed

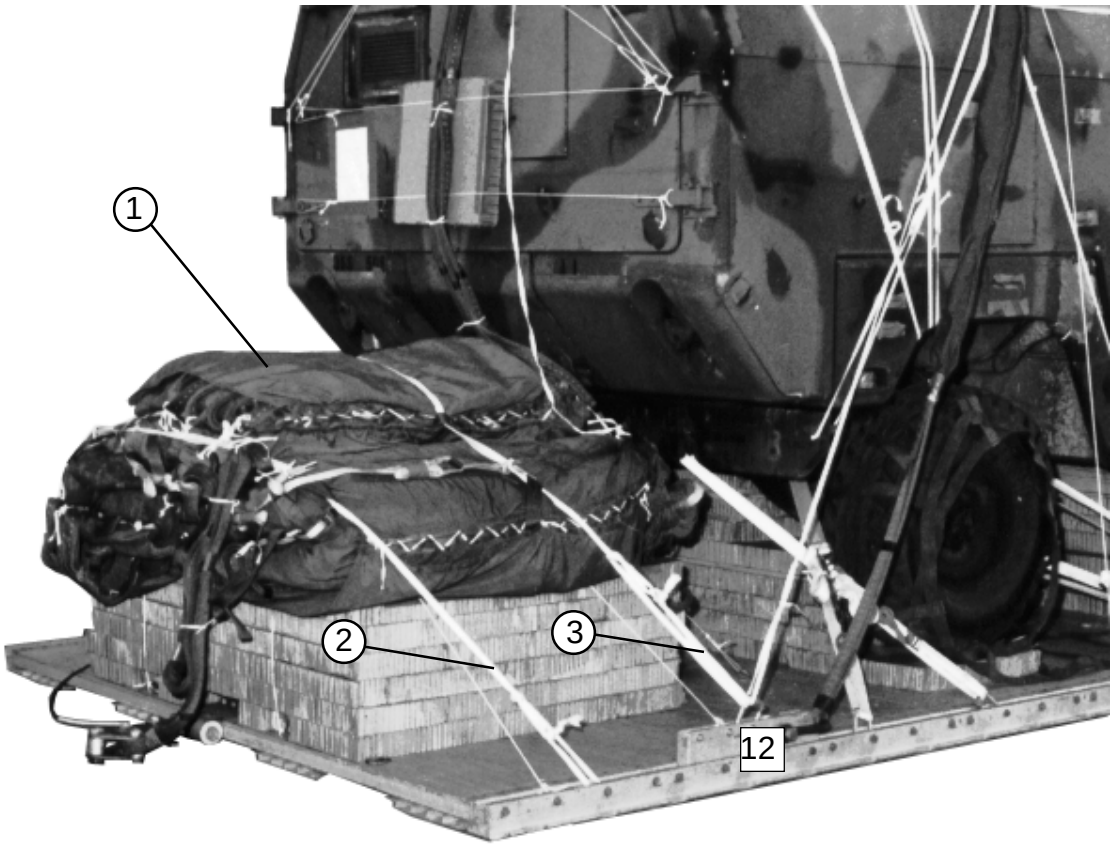

1. Install three G-11 cargo parachutes according to FM 10-500-2/TO 13C7-1-5.
2. Tie the rear parachute restraint strap to the 38th bushing on each side.
3. Tie the front parachute restraint strap to clevises 12 and 12A.

Figure 2-27. Parachutes Installed

INSTALLING EXTRACTION SYSTEM

2-10. Install the EFTC extraction system according to FM 10-500-2/TO 13C7-1 and as shown in Figure 2-28.

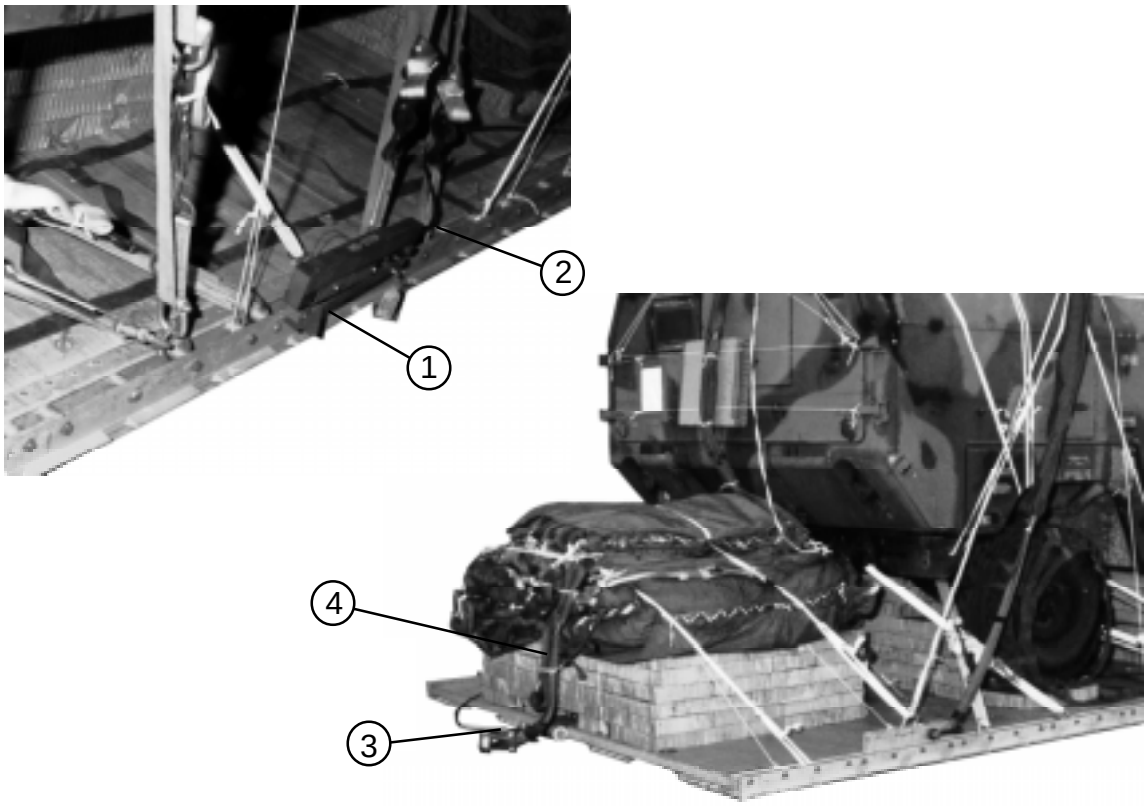

1. Install the actuator brackets to the rear holes in the left platform side rail.
2. Install the actuator and a 16-foot cable. Tie the cable to convenient points inside the lashings with type I, 1/4-inch cotton webbing.
3. Install the latch assembly and install the cable. Tie the cable to the left rear tie-down ring with type I, 1/4-inch cotton webbing.
4. Install a 9-foot (2-loop), type XXVI nylon webbing sling as the deployment line.

Figure 2-28. EFTC Installed

INSTALLING PARACHUTE RELEASE

2-11. Install an M-1 cargo parachute release according to FM 10-500-2/TO 13C7-1-5, and as shown in Figure 2-29.

INSTALLING PROVISIONS FOR EMERGENCY RESTRAINTS

2-12. Install provisions for emergency restraints on the front of the platform according to FM 10-500-2/TO 13C7-1-5.

PLACING EXTRACTION PARACHUTE

2-13. Select the extraction parachute and the extraction line needed using the extraction line requirements table in FM 10-500-2/TO 13C7-1-5. Place the extraction parachute and the extraction line on the load for installation in the aircraft.

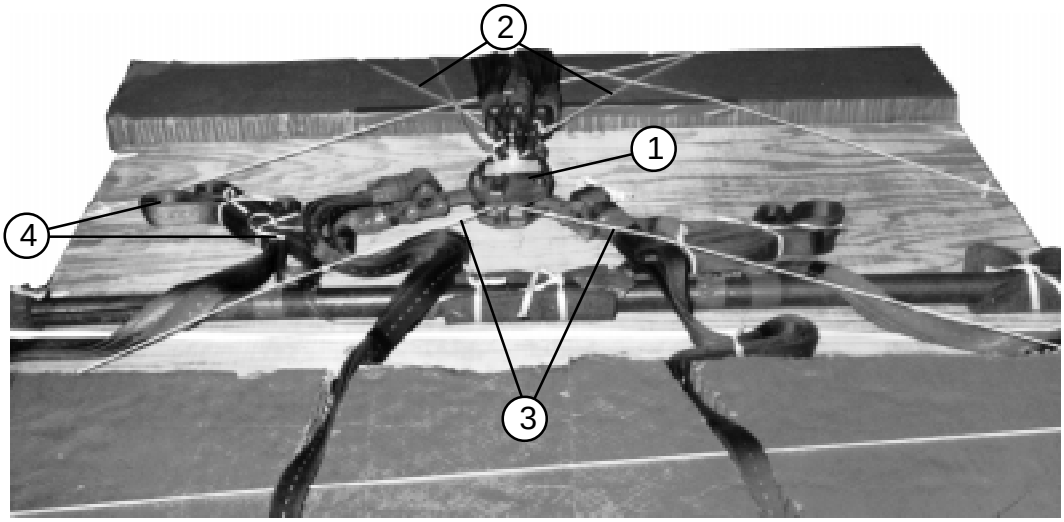

1. Center the release assembly on the roof behind the spreader bar as shown. Connect the suspension slings and the riser extensions according to FM 10-500-2/TO 13C7-1-5.
2. Safety tie the connector links to the door hinges with type III nylon cord.
3. Safety tie the bottom of the release to the platform rails with type III nylon cord.
4. S-fold and tie any slack in the suspension slings with type I, 1/4-inch cotton webbing.

Figure 2-29. M-1 Release Installed

MARKING RIGGED LOAD

2-14. Mark the rigged load according to FM 10-500-2/TO 13C7-1-5. Complete Shipper's Declaration for Dangerous Goods. If the load varies from the one shown, the weight, height, CB, and parachute requirements must be recomputed.

EQUIPMENT REQUIRED

2-15. Use the equipment listed in Table 2-1 to rig this load.

CAUTION
Make the final rigger inspection required by FM 10-500-2/TO 13C7-1-5 before the load leaves the rigging site.

Note: Secure the ambulance to the carrier when transporting this load from the rigging site to the departure airfield.

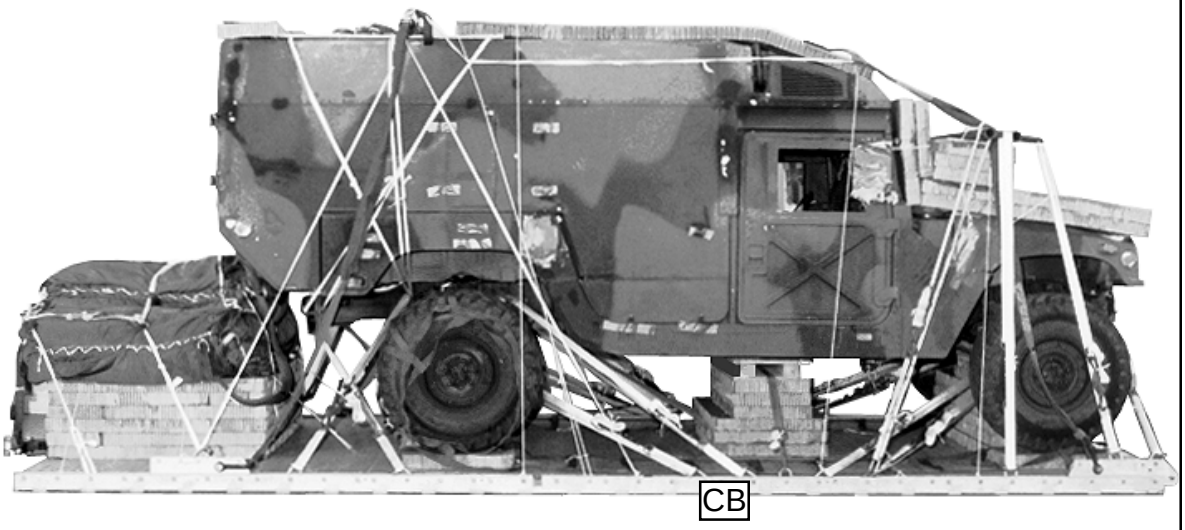

RIGGED LOAD DATA

Weight: Load shown.....11,680 pounds
Maximum load allowed.....12,000 pounds
Height .....100 inches
Width.....108 inches
Length.....258 inches
Overhang: Front.....0 inches
Rear.....0 inches
CB (from front edge of platform).....110 inches

Figure 2-30. M996, 2-litter Armored Ambulance (HMMWV) Rigged for Low-velocity Airdrop

Table 2-1. Equipment Required for Rigging M996 Ambulance for Low-velocity Airdrop

National Stock Number	Item	Quantity
8040-00-273-8713	Adhesive, paste, 1-gal	As required
1670-00-003-4389	Bar, attitude control	1
4030-00-090-5354	Clevis, suspension, 1-in (large)	5
4020-00-240-2146	Cord, nylon, type III, 550-lb	As required
1670-00-434-5785	Coupling, airdrop, extraction force transfer with cable, 16-ft	1
	Cover:	
1670-00-360-0328	Clevis, large	1
1670-00-360-0329	Link, type IV	7
8135-00-664-6958	Cushioning material, packaging, cellulose wadding	As required
8305-00-958-3685	Felt, 1/2-in thick	As required
1670-01-183-2678	Leaf, extraction line (line bag)	3
	Line, drogue (for C-17)	
1670-01-064-4452	60-ft (1-loop), type XXVI	1
	Line, extraction:	
1670-01-062-6313	For C-130: 60-ft (3-loop), type XXVI	1
1670-01-107-7651	For C-141: 140-ft (3-loop), type XXVI	1
	For C-5:	
1670-01-062-6313	60-ft (3-loop), type XXVI and	1
1670-01-107-7651	140-ft (3-loop), type XXVI	1
	For C-17:	
1670-01-107-7651	140-ft (3-loop), type XXVI	1
	Link assembly	
1670-00-783-5988	Type IV	7
	Two-point:	
5306-00-435-8994	Bolt, 1-in diam, 4-in long	2
5310-00-232-5165	Nut, 1-in, hexagonal	2
1670-00-003-1953	Plate, side, 3 3/4-in	2
5365-00-007-3414	Spacer, large	2
	Lumber:	
5510-00-220-6148	2- by 6-in	As required
5510-00-220-6274	4- by 4-in	As required
5315-00-010-4659	Nail, steel wire, 8d	As required

Table 2-1. Equipment Required for Rigging M996 Ambulance for Low-velocity Airdrop (continued)

National Stock Number	Item	Quantity
1670-00-753-3928	Pad, energy-dissipating (honeycomb) 3- by 36- by 96-in	20 sheets
	Parachute:	
	Cargo:	
1670-01-016-7841	G-11B	3
	Cargo extraction:	
1670-01-063-3716	22-ft	1
1670-01-063-3715	15-ft Drogue (for C-17)	1
	Platform, airdrop, type V, 20-ft	
1670-01-353-8425	Bracket assembly, coupling	(1)
1670-01-162-2372	Clevis assembly, type V	(26)
1670-01-353-8424	Extraction bracket assembly	(1)
1670-01-247-2389	Suspension link	(2)
1670-01-162-2381	Tandem link assembly (Multipurpose link)	(2)
5530-00-128-4981	Plywood, 3/4-in	4 sheets
1670-01-097-8816	Release, cargo parachute, M-1	1
	Sling, cargo, airdrop	
	For suspension:	
1670-01-062-6302	20-ft (2-loop), type XXVI nylon webbing	4
	For lifting:	
1670-01-062-6301	3-ft (2-loop), type XXVI nylon webbing	1
1670-01-062-6303	12-ft (2-loop), type XXVI nylon webbing	2
1670-01-063-7761	16-ft (2-loop), type XXVI nylon webbing	2
	For deployment:	
1670-01-062-6304	9-ft (2-loop), type XXVI nylon webbing	1
	For riser extension:	
1670-01-062-6302	20-ft (2-loop), type XXVI nylon webbing	6
4910-01-313-8839	Spreader bar assembly	1
5340-00-040-8219	Strap, parachute release, multi-cut, comes w/ 3 knives	2
7510-00-266-5016	Tape, adhesive, 2-in	As required
1670-00-937-0271	Tie-down assembly, 15-foot	23
1670-01-344-0825	Vehicle drive-off aid	1
	Webbing:	
8305-00-268-2411	Cotton, 1/4-in, type I	As required
8305-00-082-5752	Nylon, tubular, 1/2-in	As required
8305-00-263-3591	Type VIII	As required

GLOSSARY

ACB	attitude control bar
AD	airdrop
AFB	Air Force base
AFJMAN	Air Force Joint Manual
AFR	Air Force regulation
AFTO	Air Force technical order
ALC	Airlift Logistics Center
attn	attention
C	change
cap	capacity
CB	center of balance
chap	chapter
d	penny
DA	Department of the Army
DC	District of Columbia
DD	Department of Defense
diam	diameter
EFTC	extraction force transfer coupling
fig	figure
FM	field manual
ft	foot/feet
gal	gallon
HQ	headquarters
in	inch
JAI	joint airdrop inspector
lb	pound
LV	low-velocity
MCRP	Marine Corps Reference Publication
mm	millimeter
NSN	national stock number
OVE	on-vehicular equipment
TM	technical manual
TO	technical order
TRADOC	US Army Training and Doctrine Command
US	United States
w	with
yd	yard

REFERENCES

AFR 55-40/AR 59-4. Joint Airdrop Inspection Records, Malfunction Investigations and Activity Reporting. 27 November 1984.

*AFJMAN 24-204/TM 38-250. Preparing Hazardous Materials for Military Air Shipments. 25 November 1994.

FM 10-500-2/TO 13C7-1-5. Airdrop of Supplies and Equipment: Rigging Airdrop Platforms. 1 November 1990.

TM 9-2320-280-10/TO 36A-12-1A-2091-1/TM 2320-10/6. Operator's Manual for Truck, 1 1/4-ton. April 1985

TM 10-1670-268-20&P/TO 13C7-52-22. Organizational Maintenance Manual With Repair Parts and Special Tools List: Type V Airdrop Platform. 1 June 1986.

TM 10-1670-278-23&P/TO 13C5-26-2/NAVAIR 13-1-27/TM 01109C-23&P/1. Unit and Intermediate DS Maintenance Manual Including Repair Parts and Special Tools List for Parachute, Cargo Type, 15-ft Diam, Cargo Extraction. 6 November 1989.

TM 10-1670-279-23&P/TO 13C5-27-2/NAVAIR 13-1-28. Unit and Intermediate DS Maintenance Manual Including Repair Parts and Special Tools List for Parachute, Cargo Type, 22-ft Diam, Cargo Extraction. 30 August 1989.

TM 10-1670-280-23&P/TO 13C5-31-2/NAVAIR 13-1-31. Unit and Intermediate DS Maintenance Manual Including Repair Parts and Special Tools List for Parachute, Cargo Type, G-11A, G-11B, and G-11C. 5 August 1991.

TM 10-1670-286-20/TO 13C5-2-41. Unit Maintenance Manual for Sling/Extraction Line Panel (Including Stowing Procedures). 1 April 1986

AFTO Form 22. Technical Order Publication Improvement Report

DA Form 2028. Recommended Changes to Publication and Blank Forms. February 1974.

* Shipper's Declaration for Dangerous Goods. Locally procured form

*AFJMAN24-204/TM 38-250 has superseded AFR 71-4/TM 38-250 (15 January 1988). This revision reflects this change.

* Shipper's Declaration for Dangerous Goods has superseded DD Form 1387-2 (February 1982.) This revision reflects this change.

FM 10-500-66
TO 13C7-25-71
6 AUGUST 1999

By Order of the Secretary of the Army:

ERIC K. SHINSEKI
General, United States Army
Chief of Staff

Official:

JOEL B. HUDSON
Administrative Assistant to the
Secretary of the Army
9916610

DISTRIBUTION:

Active Army, Army National Guard, and U.S. Army Reserve: To be distributed in accordance with the initial distribution number 114830, requirements for FM 10-500-66.

PIN: 068807-000